KACO new energy.

Powador

30.0 TL3 M/XL | 33.0 TL3 M/XL
36.0 TL3 M/XL | 39.0 TL3 M/XL
40.0 TL3 M/XL | 48.0 TL3 Park
60.0 TL3 M/XL | 72.0 TL3 Park

Operating Instructions

- **English translation of German original**

These instructions form part of the product and must be observed. They must also be stored in a place which is freely accessible at all times.

The copyright for these operating instructions is held solely by KACO new energy GmbH.

EN

Operating Instructions

Contents

1 General information ... 4
1.1 About this document ... 4
1.2 Layout of Instructions ... 4
1.3 Target group ... 5
2 Safety ... 5
2.1 Proper use ... 6
2.2 Protection features ... 6
2.3 Additional information ... 6
3 Description ... 7
3.1 Mode of Operation ... 7
3.2 Diagram ... 7
4 Technical Data ... 10
4.1 Electrical data ... 10
4.2 Mechanical data ... 12
4.3 Identification ... 12
5 Transportation and Delivery ... 13
5.1 Scope of delivery ... 13
5.2 Transportation ... 13
6 Mounting ... 14
6.1 Unpacking ... 15
6.2 Install and secure ... 16
6.3 Fitting the housing (30.0-48.0 TL3) ... 17
6.4 Securing the unit ... 18
7 Electrical connection ... 18
7.1 Opening the unit ... 18
7.2 Lay the electrical lines ... 19
7.3 Cable and fuse requirements ... 19
7.4 Connection to the power grid ... 20
7.5 Connecting the interfaces ... 25
7.6 Sealing the connection area ... 28
7.7 Switching on the device ... 28
8 Configuration and Operation ... 30
8.1 Controls ... 30
8.2 Initial start-up ... 33
8.3 Menu structure ... 33
8.4 Monitor inverter ... 43
8.5 Performing the software update ... 45
9 Maintenance/Troubleshooting ... 46
9.1 Visual inspection ... 46
9.2 Cleaning the housing ... 46
9.3 Shutting down for maintenance and troubleshooting ... 47
9.4 Disconnecting connections ... 47
9.5 Faults ... 48
9.6 "Fault" messages on the display/LED ... 50
10 Service ... 54
11 Shutdown/Disassembly ... 55
11.1 Switching off the unit ... 55
11.2 Uninstalling the device ... 55
11.3 Disassembling the unit ... 55
11.4 Packaging the unit ... 56
11.5 Storing the unit ... 56
12 Disposal ... 56
13 Appendix ... 57
13.1 EU Declaration of Conformity ... 57

EN

1 General information

1.1 About this document

WARNING

Improper handling of the device can be hazardous

› You must read and understand the operating instructions so that you can install and use the device safely!

1.1.1 Other applicable documents

During installation, observe all assembly and installation instructions for components and other parts of the system. These instructions also apply to the equipment, related components and other parts of the system. Some of the documents which are required for the registration and approval of your photovoltaic (PV) system are included with the operating instructions.

1.1.2 Storing the documents

These instructions and other documents must be stored near the system and be available at all times. The content of these instructions is revised on a regular basis and updated if necessary. You can download the current version of the operating instructions at www.kaco-newenergy.com.

1.1.3 English translation of German original

These operating instructions have been produced in several languages. The German-language version of the operating instructions is the original version. All other language versions are translations of the original operating instructions.

1.2 Layout of Instructions

1.2.1 Symbols used

General hazard

Risk of fire or explosion

High voltage

Risk of burns

Authorised electrician Only authorised electricians are permitted to carry out tasks indicated with this symbol!

1.2.2 Safety warnings symbols guide

DANGER

High risk

Failure to observe this warning will lead directly to serious bodily injury or death.

WARNING

Potential risk

Failure to observe this warning may lead to serious bodily injury or death.

CAUTION

Low-risk hazard

Failure to observe this warning will lead to minor or moderate bodily injury.

EN

CAUTION

Risk of damage to property

Failure to observe this warning will lead to property damage.

1.2.3 Additional information symbols

NOTE

Useful information and notes

EN **Country-specific function**

Functions restricted to one or more countries are labelled with country codes in accordance with ISO 3166-1.

1.2.4 Instructions symbols guide

Instructions

↻ Prerequisite(s) before carrying out the following step(s) (optional)

1. Carry out step.
2. (Additional steps, if applicable)

» Result of the step(s) (optional)

1.3 Target group

All activities described in the document may only be carried out by specially trained personnel with the following qualifications:

- Knowledge about how an inverter functions and operates
- Training in the handling of hazards and risks during the installation and operation of electrical devices and systems
- Education concerning the installation and startup of electrical units and systems
- Knowledge of applicable standards and directives
- Knowledge and adherence to this document with all safety notices.

2 Safety

DANGER

Lethal voltages are still present in the terminals and cables of the inverter even after the inverter has been switched off and disconnected.

Severe injuries or death will occur when touching the cables and terminals in the inverter.

Only appropriately qualified and authorised electricians may open, install or maintain the inverter.

› Keep the inverter closed when the unit is in operation.

› Do not touch the cables or terminals when switching the unit on and off.

› Do not make any modifications to the inverter.

The electrician is responsible for observing all existing standards and regulations.

- Keep unauthorised persons away from the inverter and PV system.
- In particular, be sure to observe the standard IEC-60364-7-712:2002 "Requirements for special installations or locations – solar photovoltaic (PV) power supply systems".
- Ensure operational safety by providing proper grounding, conductor dimensioning and appropriate protection against short circuiting.

EN

- Observe all safety instructions on the inverter and in these operating instructions.
- Switch off all voltage sources and secure them against being inadvertently switched back on before performing visual inspections and maintenance.
- When taking measurements while the inverter is live:
  - Do not touch the electrical connections
  - Remove all jewellery from wrists and fingers.
  - Ensure that the testing equipment is in safe operating condition.
- Stand on an insulated surface when working on the inverter.
- Modifications to the surroundings of the inverter must comply with the applicable national and local standards.
- When working on the PV generator, it is also necessary to switch off the DC voltage with the DC isolator switch in addition to disconnecting the PV generator from the grid.

2.1 Proper use

The inverter converts the DC voltage generated by the PV modules into AC voltage and feeds it into the grid. The inverter is built according to the latest technological standards and safety regulations. Nevertheless, improper use may cause lethal hazards for the operator or third parties, or may result in damage to the unit and other property.

Operate the inverter only with a permanent connection to the public power grid.

Any other or additional use of the device shall be regarded as improper. This includes:

- Mobile use,
- Use in rooms where there is a risk of explosion,
- Use in rooms where the humidity is higher than 95%
- Use in outdoor areas if the inverter is exposed to direct sunlight, rain or a storm,
- Use less than 100 m distant from the coast,
- Operation outside of the specifications intended by the manufacturer
- Standalone operation.

2.2 Protection features

The following monitoring and protection functions are built-in:

- Overvoltage conductors/varistors to protect the power semiconductors from high-energy transients on the grid and generator side
- Temperature monitoring of the heat sink
- EMC filters to protect the inverter from high-frequency grid interference
- Grid-side grounded varistors to protect the inverter against burst and surge pulses
- Islanding detection according to VDE 0126-1-1

2.3 Additional information

NOTE

The EU Declaration of Conformity can be found in the appendix.

For information on grid coupling, grid protection and safety parameters along with more detailed instructions see our web site at http://www.kaco-newenergy.de/.

EN

3 Description

3.1 Mode of Operation

The inverter converts the DC voltage generated by the PV modules into AC voltage and feeds it into the grid. The starting procedure begins when there is sufficient sunlight and a specific minimum voltage is present in the inverter. The feed-in process begins once the PV generator has passed the insulation test and the grid parameters are within the requirements imposed by the grid operator for a specific monitoring time. If, as it gets dark, the voltage drops below the minimum voltage value, feed-in operation ends and the inverter switches off.

3.2 Diagram

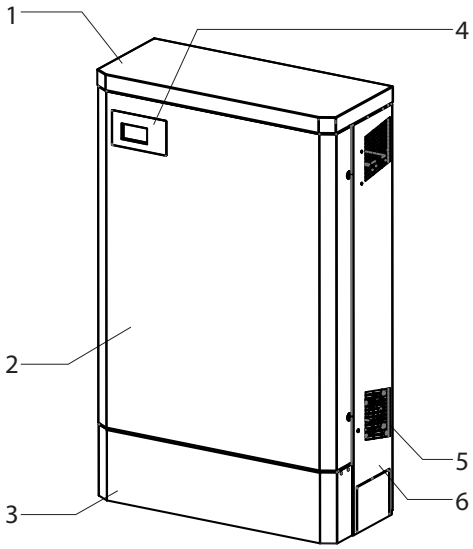

Figure 1: Inverter diagram

Key			
1	Upper housing cover	4	Control panel
2	Doors	5	Fan cover
3	Cover for the connection area	6	Side housing cover

3.2.1 Mechanical components

DC isolator switch

There are 3 DC isolator switches inside the inverter housing. The DC isolator switch is used to disconnect the inverter from the PV generator in order to carry out service activities.

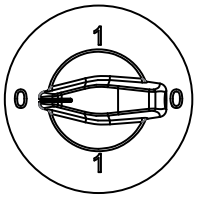

Figure 2: DC isolator switch

Disconnecting the inverter from the PV generator

☞ Switch the DC isolator switches from 1 (ON) to 0 (OFF).

Connecting the inverter to the PV generator

☞ Switch the DC isolator switches from 0 (OFF) to 1 (ON).

3.2.2 Electrical functions

A potential-free relay contact is integrated in the inverter. Use this contact for one of the following functions:

EN

Fault signal relay

The potential-free relay contact closes as soon as there is a fault during operation. You use this function, for example, to signal a fault visually or acoustically.

Priwatt

The energy that is provided by the PV system can be put to use directly by the appliances that are connected in your home.

The potential-free contact can switch larger appliances (e.g. air conditioning units) on and off with the "priwatt" function activated. This requires an external power supply and an external load relay.

When the function is active, either the remaining runtime (in hours and minutes) or the shutdown threshold (in kW) is displayed on the start screen depending on the operating mode selected. The "priwatt" function is not active in the unit's delivery state. The option can be configured in the Settings menu.

3.2.3 Interfaces

RS485 interface

Use this monitoring option if you cannot check the functioning of the system on-site on a regular basis, e.g. if your place of residence is located a great distance from the system. To connect the RS485 interface, contact your authorised electrician.

For monitoring your PV system using the RS485 interface, KACO new energy GmbH offers monitoring devices:

Ethernet interface

Monitoring can occur directly on the unit using the integrated Ethernet interface. A local web server is installed in the unit for this purpose.

For monitoring a system comprising several inverters, we recommend you use an external data logging and monitoring system.

USB interface

The USB connection of the inverter is a type A socket. You will find the USB connection on the connection circuit board in the upper area on the inside of the door. The USB connection is specified to draw 100 mA of power. Use the USB interface to read out stored operating data and to load software updates using a FAT32-formatted USB stick.

S0 interface

The S0 interface transmits pulses between a pulsing counter and a tariff metering unit. It is a galvanically isolated transistor output. It is designed according to DIN EN 62053-31:1999-04 (pulse output devices for electromechanical and electronic meters).

NOTE

The S0 interface sends a specific number of pulses per kilowatt-hour output.

The number of pulses per kilowatt-hour output that can be sent by the S0 interface depends on the maximum feed-in power of the inverter and can be set in the menu.

30.0-36.0 TL3	500, 1,000 or 2,000 pulses/kWh.
39.0-60.0 TL3	500 or 1000 pulses/kWh
72.0 TL3	500 pulses/kWh

"Inverter Off" input

If Powador protect is installed as a central grid and system protection, the fail-safe disconnection of suitable KACO inverters from the public grid can be initiated by a digital signal instead of tie circuit-breakers. This requires the inverters in the photovoltaic system to be connected to the Powador protect. Information on installation and use can be found in this manual, in the Powador protect manual and in the instructions for use of the Powador protect on the KACO web site.

EN

3.2.4 Inverter as part of a PV system

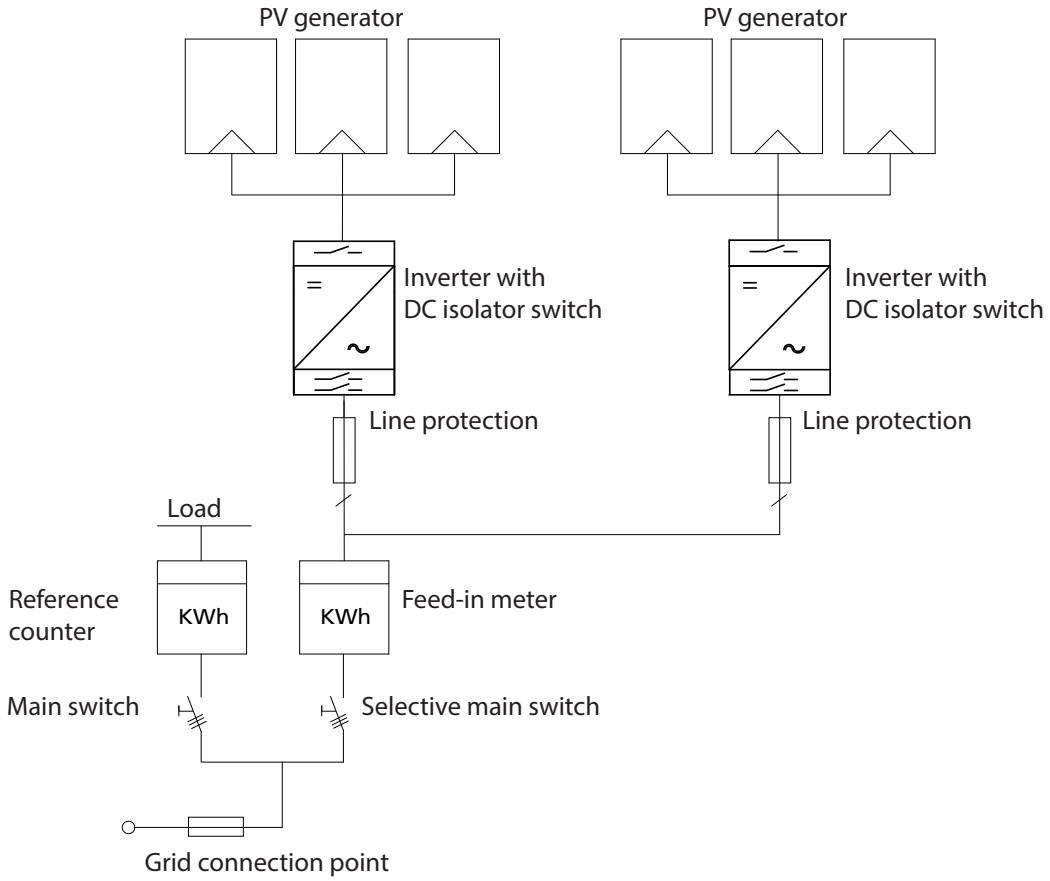

Figure 3: Circuit diagram of a system with two inverters

Key	Definition / Information about the connection
PV generator	The PV generator, i.e. the PV modules, converts the radiant energy of sunlight into electrical energy.
Inverter with:	
- DC connection	The PV generator is connected directly to the inverter's DC connection.
- DC isolator switch	Use the DC isolator switch to disconnect the inverter from the PV generator.

DANGER

Lethal voltages are still present in the terminals and cables of the inverter even after the inverter has been switched off and disconnected.

Disconnect DC-Side:

- Check that there is no current in any of the DC cables using a clip-on ammeter
- Only open the fuse holder once you have established that there is no current in the DC cables
- Directly to the inverter (terminals for 12 (3 x 4) strings are provided on the inverter),
- Directly to the PV generator with a positive and negative lead to the inverter

Circuit breaker	A circuit breaker is an overcurrent protection device.
Feed-in meter	The feed-in meter is to be specified and installed by the power supply company. Some power supply companies also allow the installation of your own calibrated meters.
Selective main switch	The selective main switch is to be specified by the power supply company.

EN

4 Technical Data

4.1 Electrical data

Input levels	30.0 TL3	33.0 TL3	36.0 TL3	39.0 TL3
Recommended power range of the generator [kW]	33.75	37.12	40.5	44.95
MPP@Pnom from [V] to [V]	350 ... 800			
Operating range from [V] to [V]	200 ... 800			
Starting voltage [V]*	250			
No-load voltage ($U_{OC\ max}$) [V]	1,000			
Max. input current [A]	3 x 34.0			
Max. power per MPP tracker [W]	20,000			
Number of DC connections	3 x 1 (M) / 3 x 4 (XL)			
Number of MPP controls	3			
max. short-circuit current ($I_{SC\ max}$) [A]	3x 40.8			
max. input source feedback current [A]	0			
Polarity safeguard	Short-circuit diode			
Output levels				
Rated power [VA]	25,000	27,500	30,000	33,300
Grid voltage [V]	400 / 230 (3/N/PE)			
Rated current [A]	3 x 36.2	3 x 39.9	3 x 45.5	3 x 48.3
Initial short-circuit alternating current (Ik" first single period effective value) [A]	49.3			
inrush current [A]	98			
Rated frequency [Hz]	50/60			
cos phi	0.30 inductive ... 0.30 capacitive			
Number of feed-in phases	3			
Distortion factor (THD) [%]	< 3			
General electrical data				
Max. efficiency [%]	98.0			
European efficiency [%]	97.8			
Self consumption: standby [W]	< 30			
Self consumption: night [W]	~1.5			
Feed-in starts at [W]	120			
Circuit design	IGBT, self-commutated, transformerless			
Grid monitoring	Country-specific			
CE conformity	Yes			

Table 1: Electrical data

Input levels	40.0 TL3	48.0 TL3 Park	60.0 TL3	72.0 TL3 Park
Recommended power range of the generator [kW]	48.6	54	67.5	81
MPP@Pnom from [V] to [V]	350 ... 800	410 ... 800	480 ... 850	580 ... 850
Operating range from [V] to [V]	200 ... 800	200 ... 800	200 ... 850	200 ... 850
Starting voltage [V]*	250			
Open circuit voltage [V]	1,000			
Rated current max. [A]	3 x 34.0	3 x 34.0	3 x 36.0	3 x 36.0
Max. power per tracker [W]	20,000	20,000	20,000	24,000
Number of strings	3 x 1 (M) 3 x 4 (XL)	3 x 1 (M) 3 x 4 (XL)	3 x 1 (M) 3 x 4 (XL)	3 x 1 (M) 3 x 4 (XL-F) 3 x 5 (XL)
Number of MPP trackers	3			
max. short-circuit current ($I_{SC\ max}$) [A]	3 x 40.8	3x 40.8	3 x 43.2	3 x 43.2
max. input source feedback current [A]	0			
Polarity safeguard	Short-circuit diode			
Output levels				
Rated power [VA]	36,000	40,000	49,900	60,000
Grid voltage [V]	400 / 230	480 / 277**	400 / 230	480 / 277**
Rated current [A]	3 x 52.2	3 x 48.1	3 x 72.2	3 x 72.2
Initial short-circuit alternating current (Ik" first single period effective value) [A]	49.3	49.3	75.0	74.4
inrush current [A]	98			
Rated frequency [Hz]	50/60			
cos phi	0.30 inductive ... 0.30 capacitive			
Number of feed-in phases	3			
Distortion factor [%]	< 3			
General electrical data				
Max. efficiency [%]	98.0	98.0	97.9	98.0
European efficiency [%]	97.8	97.9	97.7	97.8
Self consumption: standby [W]	< 30			
Self consumption: night [W]	~1.5			
Feed-in starts at [W]	120			
Circuit design	IGBT, self-commutated, transformerless			
Grid monitoring	Country-specific			
CE conformity	Yes			

Table 2: Electrical data

* The DC starting voltage can be in the menu if needed.

**Device is designed for use exclusively on the medium-voltage grid.

EN

4.2 Mechanical data

	30.0-72.0 TL3
Display	Graphical LCD, 3 LEDs
Controls	4-way button, 2 buttons
Interfaces	Ethernet, USB, RS485, S0, Digital output "Inverter off"
Fault signal relay	Potential-free NO contact, max. 30 V DC / 1 A
AC connection terminals	Screw terminals inside the unit min. cross section: 16 mm² rigid/flexible max. cross-section: 50 mm² rigid/flexible
AC cable connection	Via M50 cable fitting
DC connection terminals (M variant)	Screw terminals on top hat rail inside the unit min. cross section: 6 mm² rigid/flexible max. cross-section: 35 mm² rigid/flexible
DC connection terminals (XL variant)	Screw terminals on top hat rail inside the unit min. cross section: 2.5 mm² rigid/flexible max. cross-section: 10 mm² rigid/flexible
Connections for DC cable connection	30.0 - 40.0 TL3: via 6 M32 cable fittings 60.0 - 72.0 TL3: via 6 M40 cable fittings
Connection for Ethernet cable connection	via M25 cable fitting
Ambient temperature range [°C]	-20 ... 60
Maximum installation elevation (meter above mean sea level)	2,000
Temperature monitoring	Yes
Cooling (free convection (K)/fan (L))	L
Protection rating according to EN 60529	IP54
Degree of contamination	PD2
DC isolator switch	Built-in
Housing	Steel plating
H x W x D [mm]	1360 x 840 x 355
Total weight [kg]	**151** (30.0-48.0 TL3), **173** (60.0-72.0 TL3)

Table 3: Mechanical data

4.3 Identification

Identifying the unit

↻ You will find the name plate with product-specific data for service and other requirements specific to installation on the right side panel of the inverter. This data includes:

- Product name
- Part no.
- Serial no.
- Date of manufacture
- Technical Data
- Disposal information
- Certification marking, CE marking.

Figure 4: Name plate

EN

5 Transportation and Delivery

Every inverter leaves our factory in proper electrical and mechanical condition. Special packaging ensures that the units are transported safely. The shipping company is responsible for any transport damage that occurs.

5.1 Scope of delivery

- inverter
- Housing cover: Cover plates right and left, cover
- Installation kit
- Documentation

Checking your delivery

1. Inspect your inverter thoroughly.
2. Immediately notify the shipping company in case of the following:
   - Damage to the packaging that indicates that the inverter may have been damaged
   - Obvious damage to the inverter
3. Send a damage report to the shipping company immediately.

The damage report must be received by the shipping company in writing within six days following receipt of the inverter.
We will be glad to help you if necessary.

5.2 Transportation

CAUTION

Impact hazard, risk of breakage to the inverter

› Pack the inverter securely for transport.
› Carefully transport the inverter using the transportation pallet.
› Do not subject the inverter to shocks.

For safe transportation of the inverter, use a transportation pallet.

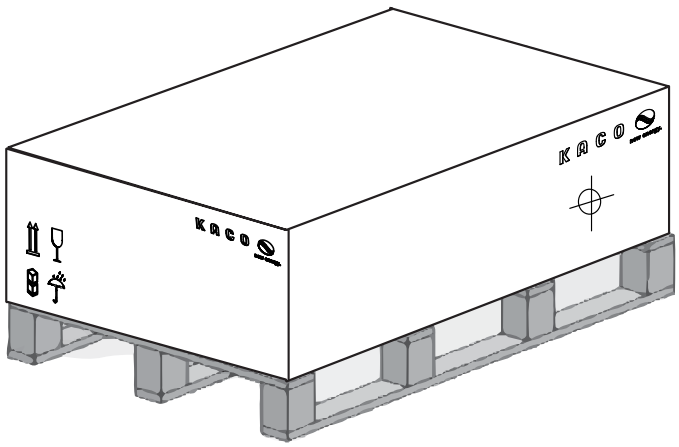

Figure 5: Transportation of the inverter

Packaging (folding cartons) (H x W x D (mm))	1360 x 850 x 360
Total weight [kg]	158 (30.0-48.0 TL3), 180 (60.0-72.0 TL3)

Table 4: Dimensions and weight

EN

Authorised electrician

6 Mounting

DANGER

Risk of fatal injury from fire or explosions

Fire caused by flammable or explosive materials in the vicinity of the inverter can lead to serious injuries.

› Do not mount the inverter in an area at risk of explosion or in the vicinity of highly flammable materials.

Installation location

- As dry as possible, climate-controlled, with the waste heat dissipated away from the inverter
- Air circulation should not be blocked
- When installing the unit in a control cabinet, provide forced ventilation so that the heat is sufficiently dissipated
- Close to the ground, accessible from the front and sides without requiring additional resources
- Protected on all sides against heavy rain and direct sunlight (thermal heating) in outdoor areas. Implementation where necessary via constructional measures, e.g. wind breaks.
- For easy operation, ensure during installation that the display is slightly below eye level.

Floor and wall

- With sufficient load-bearing capacity
- Accessible for installation and maintenance
- Made from heat-resistant material (up to 90 °C),
- Flame resistant
- Minimum clearances to be observed during assembly: see Figure 11 on page 17.

NOTE

Access by maintenance personnel for service

Any additional costs arising from unfavourable structural or mounting conditions shall be billed to the customer.

CAUTION

Property damage due to gases that have an abrasive effect on surfaces when they come into contact with ambient humidity caused by weather conditions.

The housing may be seriously damaged by gases (ammonia, sulphur, etc.) if it comes into contact with ambient humidity caused by weather conditions.

If the inverter is exposed to gases, it must be mounted so that it can be seen at all times.

› Perform regular visual inspections.

› Immediately remove any moisture from the housing.

› Take care to ensure sufficient ventilation of the inverter.

› Immediately remove dirt, especially on vents.

› Failure to observe these warnings may lead to inverter damage which is not covered by the KACO new energy GmbH manufacturer warranty.

NOTE

Power reduction due to heat accumulation.

If the recommended minimum clearances are not observed, the inverter may go into power regulation mode due to insufficient ventilation and the resulting heat build-up.

› Maintain minimum clearances.

› Provide for sufficient heat dissipation.

EN

Authorised electrician

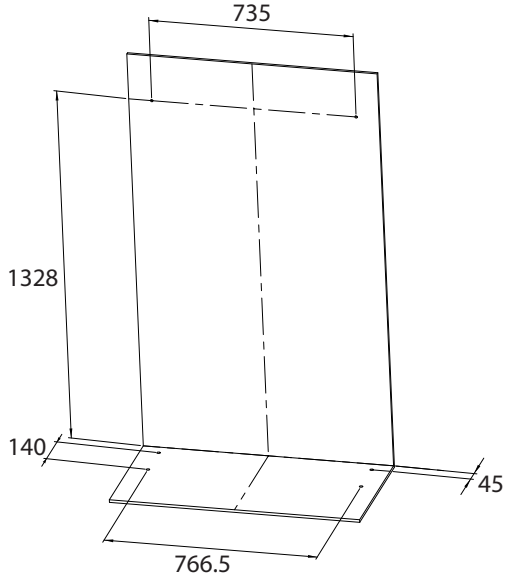

Figure 6: Drilling separation (in mm)

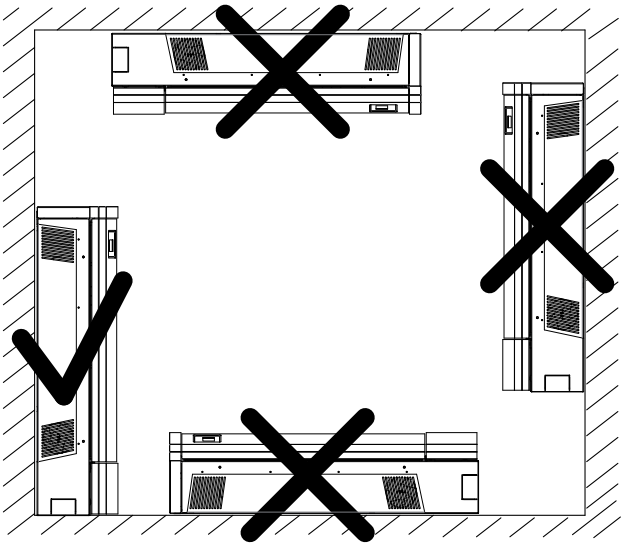

Figure 7: Instructions for wall mounting

CAUTION

Use suitable mounting parts.

- Use only the supplied mounting parts.
- Only install inverter in an upright position.
- For wall mounting: Mount the device on a vertical wall only.
- For upright installation outdoors: Weather-proof base required

6.1 Unpacking

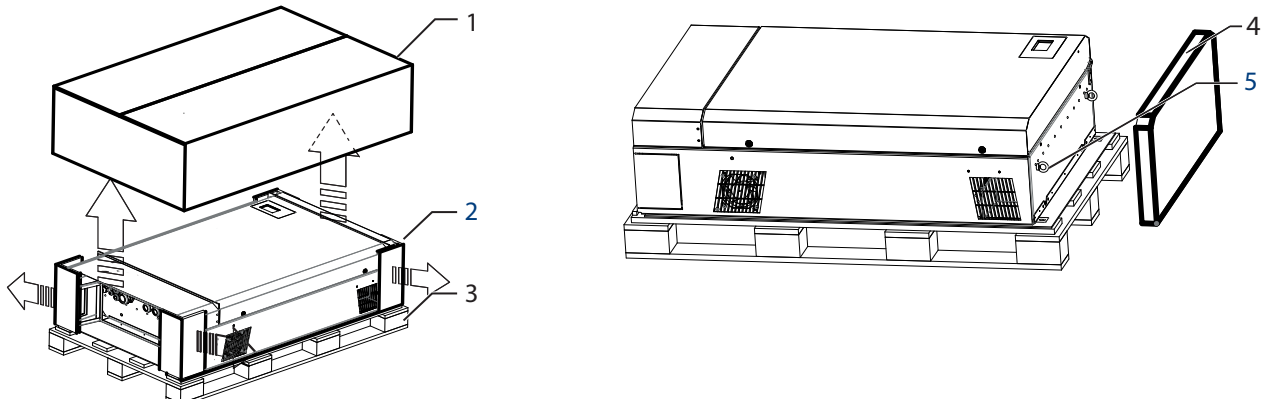

Figure 8: Unpack device/ transport device

Key			
1	Cardboard box cover	4	Cover
2	Protective corners	5	Eyebolts
3	Pallet		

EN

Authorised electrician

Unpacking the unit

1. Loosen packaging tape from cardboard box.
2. Lift down the cardboard box cover.
3. Remove protective corners.
4. Remove the cover.

6.2 Install and secure

WARNING

Impact hazard, risk of breakage to the inverter

› Pack the inverter securely for transport.
› Carefully transport the inverter using the built-in eyebolts!

CAUTION

Risk of injury if the inverter tips over!

Risk of tipping due to high centre of gravity, particularly with the housing doors open.

› Anchor the inverter securely to the ground immediately after positioning it and, if possible, fasten it to the wall.
› Do not open the housing doors until the inverter has been securely anchored.

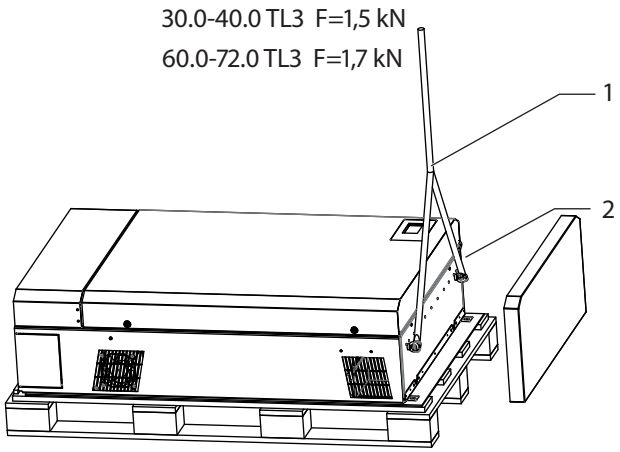

Figure 9: Transport device

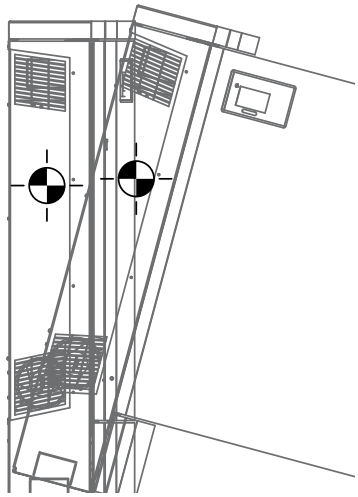

Figure 10: Transportation of the inverter

Key			
1	Shackle	3	Centre of gravity
2	Transportation rope		

Position device

1. Heave the eyebolts for the hoist.
2. Connect the shackles to the eyebolts.
3. Hang the transportation rope through the shackle.
4. Attach a transportation rope to a stable hoist. (> 2 kN)
5. Raise the device.
6. Transport to the place of assembly (keep an eye on the centre of gravity!)
7. Lash the device securely on the ground.

» Install and secure the inverter.

EN

⚠ Authorised electrician

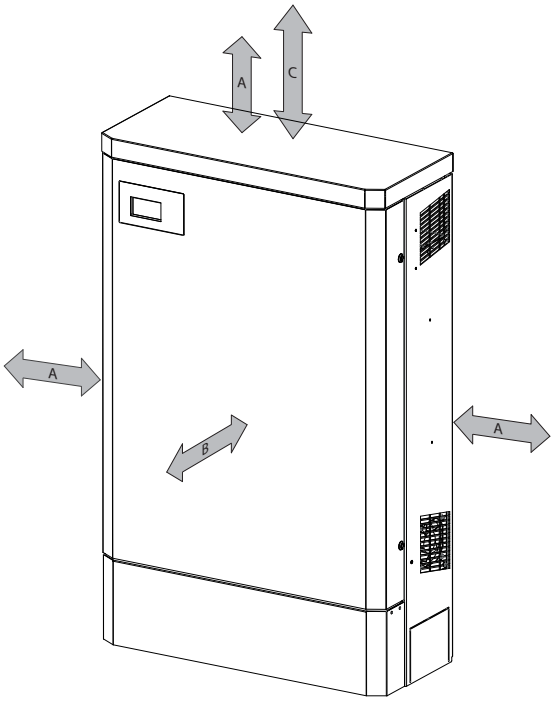

Figure 11: Minimum clearances

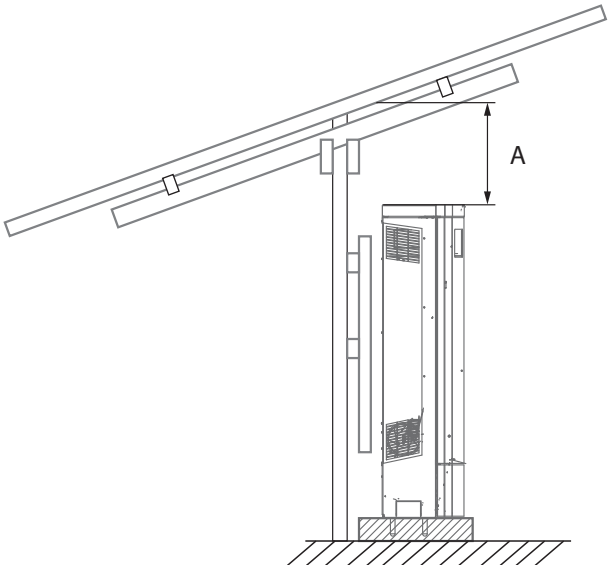

Figure 12: Installation below support system

Key		
A	horizontal distance between the two inverters / vertical distance between inverter and the ceiling	50 cm
B	Distance in front	100 cm
C	Vertical distance to an additional inverter suitable for wall mounting	70 cm

Drilling the holes

1. Mark (4x) drill holes on bottom.
2. For wall mounting: Mark the position of the holes on the wall (2x) and insert the wall anchors in the wall for additional security.
3. Drill the holes. Floor: 12 mm diameter, wall: 9 mm diameter.

» Install and secure the inverter.

6.3 Fitting the housing (30.0-48.0 TL3)

Removing the EMC sheet metal

1. Unscrew the 4 M4 x 10 screws from the EMC sheet metal.
2. Remove and store the EMC sheet metal.

Install the hood.

Installing the hood

↻ Remove the EMC sheet metal.

1. Place the hood on the top side of the housing.
2. Secure the hood to the inverter housing from the inside using the enclosed fastening screws.

» Install the side housing covers.

EN

Authorised electrician

Installing the side housing covers

↻ Remove the EMC sheet metal.

1. Place the left housing cover on the inverter housing.
2. Secure the left housing cover to the inverter housing from the inside using the 2 enclosed M4 x 10 screws.
3. Place the right housing cover on the inverter housing.
4. Secure the right housing cover to the inverter housing from the inside using the 2 enclosed M4 x 10 screws with a Torx T30 screw driver.

» Place the EMC sheet metal on the housing.

Placing the EMC sheet metal on the housing

1. Place the EMC sheet metal on the inverter housing.
2. Secure the EMC sheet metal to the inverter housing using the enclosed 25 M4 x 10 screws.

» The mounting of the inverter is complete.

» Continue with the installation.

6.4 Securing the unit

Securing the inverter

1. Position the inverter above the drill holes.
2. Use the four anchoring bolts to secure the inverter to the floor.
3. For installations at a wall: secure the inverter to the wall with two screws.

» Install the housing.

7 Electrical connection

DANGER

Lethal voltages are still present in the terminals and cables of the inverter even after the inverter has been switched off and disconnected.

Severe injuries or death will occur when touching the cables and terminals in the inverter.

Only appropriately qualified and authorised electricians may open and install the inverter.

The inverter must be mounted in a fixed position before being connected electrically.

- Observe all safety regulations and current technical connection specifications of the responsible power supply company.
- Disconnect the AC and DC sides. Secure both sides against being inadvertently switched back on.
- Check that there is no current in any of the DC cables using a clip-on ammeter.
- Only open the fuse holder once you have established that there is no current in the DC cables.
- Ensure that the AC and DC sides are completely isolated and voltage free.
- Connect the inverter only after the aforementioned steps have been taken.

7.1 Opening the unit

Open connection area

↻ You have completed assembly.

1. Unlock the two door locks with the control cabinet key.
2. Open the doors.
3. Remove the cover of the connection area.

» Make the electrical connections.

EN

Authorised electrician

7.2 Lay the electrical lines

The pre-punched perforations on the side-mounted housing base enable all electrical lines to be inserted properly in the interior of the inverter.

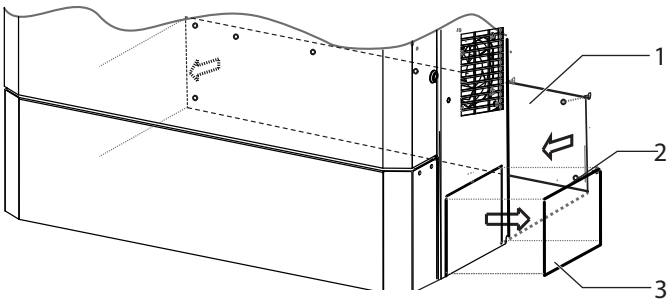

Figure 13: Perforation on the housing base /rear plinth panel

Key			
1	Plinth panel (optional)	3	Pre-punched perforation (for cable duct [72 x 110 mm])
2	Fixing screw (8x) (optional)		

NOTE

If the device is going to be installed outdoors, we recommend that an additional plinth panel is fitted in the socket area at the back end of the housing. (accessory item from KACO new energy)

NOTE

Damaged seal labels will render the warranty invalid immediately.
In the event of third-party responsibility, contact your installer and our customer service immediately.

7.3 Cable and fuse requirements

Make the connection to the PV generator as well as the grid connection via the PCB terminals in the connection area of the inverter. Note the following cable cross-sections:

	AC connection (M/XL/F)	DC connection (M)	DC connection (XL/F)
Max. conductor cross-section without wire sleeves	50 mm^2	35 mm^2	10 mm^2
Max. conductor cross-section with wire sleeves	30.0-48.0 TL3: 50 mm^2 60.0-72.0 TL3: 35 mm^2	35 mm^2	10 mm^2
Length of insulation to be stripped off	dependent on the utilised terminal type		
Tightening torque	30.0-48.0 TL3: 4-4,5 Nm 60.0-72.0 TL3: 2.5-4 Nm	-	2.5 Nm

Table 5: Recommended conductor cross-section

	Version M	Version XL	Version XL SPD 1+2
String fuses	To be provided externally on-site	internal, fuse size depends on connection	
Overvoltage conductors (surge protection device)	To be provided externally on-site	Installed internally, Type II, 1 per MPP tracker	Installed internally, Type I+II, 1 per MPP tracker
Combiner box	To be provided externally on-site	Installed internally	
Parallel connection of the DC inputs	Parallel connection not possible, connection via individual cables	Parallel connection not possible, connection via individual cables	
Overvoltage safety class	DC: III, AC: III	DC: II + III, AC: III	
Overvoltage category	DC: II, AC: III	DC: II, AC: III	
DC connection terminals	3 (1 per MPP tracker)	30.0-60.0 TL3: 12 (4 per MPP tracker) 72.0 TL3: 15 (5 per MPP tracker)	

EN

Authorised electrician

7.4 Connection to the power grid

The power connection wires are connected to the AC terminal on the left of the connection area (see Figure 14).

DANGER

Danger to life from electric shock!

Severe injury or death will result if the live connections are touched.

› Switch off all power sources to the inverter before you insert the grid power cable into the unit.

› Isolate before carrying out work on the public power supply and the system power supply.

Prepare the grid connection

↻ Use 5 core cable (L1 brown, L2 black, L3 grey, N blue, PE green/yellow) or 4 core cable (L1 brown, L2 black, L3 grey, PE green/yellow).

1. Loosen cable fitting for AC connection.
2. Remove the outer cladding of the AC cables.
3. Insert the AC cables through the cable fitting into the connection area.
4. Strip the insulation from the AC cables.
5. Making the grid connection.

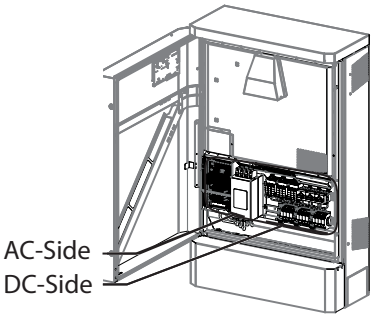

Figure 14: Connection terminals

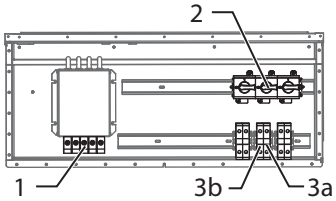

Figure 15: Powador 30.0-48.0 TL3 - M

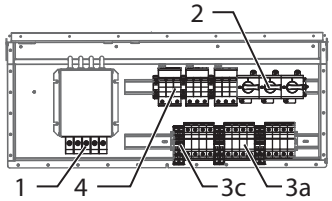

*Figure 16: Powador 30.0-48.0 TL3 - XL**

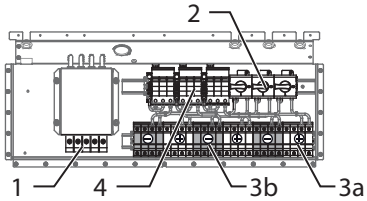

*Figure 17: Powador 30.0-48.0 TL3 - XL- F**

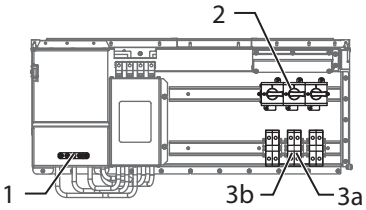

Figure 18: Powador 60.0 TL3 - M

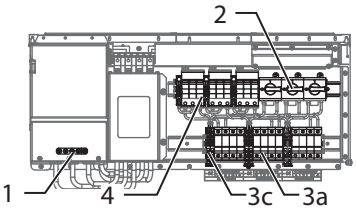

*Figure 19: Powador 60.0 TL3 - XL**

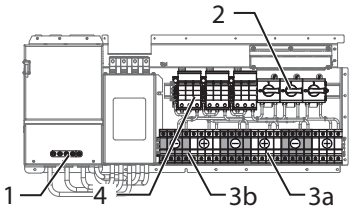

*Figure 20: Powador 60.0 TL3 - XL - F**

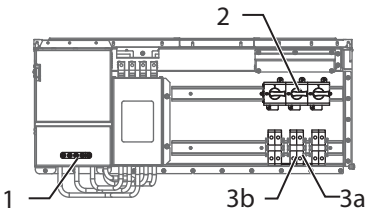

Figure 21: Powador 72.0 TL3 - M

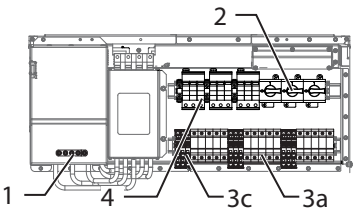

*Figure 22: Powador 72.0 TL3 - XL**

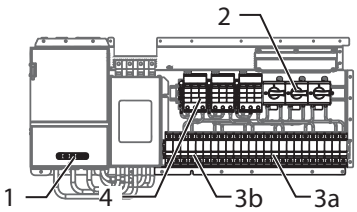

*Figure 23: Powador 72.0 TL3 - XL**

Key

1	AC connection terminals	3	DC connection terminals 3a) Fuse block (DC+) 3b) Fuse block (DC-) 3c) Feed-through terminal (DC-)
2	DC isolator switch	4	Overvoltage protection type II (*- SPD 1+2)

EN

⚠ Authorised electrician

Recommended conductor cross-sections and fuse protection of NYM cables for fixed wiring according to VDE 0100 part 430

For cable lengths up to 20 m, use the named conductor cross-sections. Longer cable lengths require larger conductor cross-sections.

Equipment types	Conductor cross-section	Fuse protection: gL safety fuses
Powador 30.0 - 48.0 TL3 M/XL/F	16 mm²	63 A for 16 mm² conductor cross-section
Powador 60.0 - 72.0 TL3 M/XL/F	35 mm²	100 A for 35 mm² conductor cross-section

Table 6: Recommended conductor cross-sections and fuse protection of NYM cables

NOTE

When selecting installation material, please consider the suitability of the product to the mains voltage (30.0-40.0 TL3, 60.0 TL3: 230/400 V. 48.0 TL3, 72.0 TL3: 277/480 V).

NOTE

An AC-side disconnection unit must be provided during the final installation stage. This cut-off mechanism must be installed so that it can be accessed at any time without obstruction.

If a residual current circuit breaker is necessary due to the installation specification, a type A residual current circuit breaker must be used.

If an A-type RCD is used, the insulation threshold value in the "parameter" menu must be **over/equal (≥) 200kOhm (See Chapter 8.3 on page 33)**.

For questions regarding the appropriate type, please contact the installer or our KACO new energy customer service.

NOTE

If the cable impedance is high (i.e. long grid-side cables), the voltage at the grid terminals of the inverter will increase during feed-in to the grid. The inverter monitors this voltage. If it exceeds the country-specific grid overvoltage limit value, the inverter switches off.

› Ensure that the conductor cross-sections are sufficiently large or that the cable lengths are sufficiently short.

Making the grid connection (5 core connection, TN-S system)

1. Run L1, L2, L3, N through the included ferrite (60.0 TL3 only).
2. Connect the cables in accordance with the label on the PCB terminals (Figure 24 on page 21).
3. Connect terminal "PE" to the equipotential bonding of your lightning protection system using a 16 mm² wire.
4. Check secure fit of all connected cables.
5. Tighten the cable fitting.

» The inverter is now connected to the power grid.

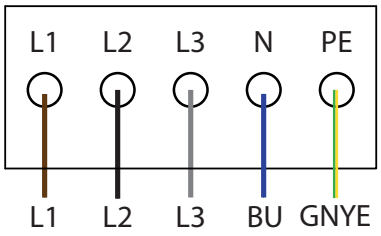

Figure 24: 5-pole connection

Making the grid connection (4 core connection, TN-C system)

1. Fit the PE terminal (not supplied) to the hat rail. Note the cable cross-sections.
2. L1, L2, L3 through the included ferrite (60.0 TL3 only).
3. Connect the cables in accordance with the label on the PCB terminals (Figure 25 on page 21).
4. Check secure fit of all connected cables.
5. Tighten the cable fitting.

» The inverter is now connected to the power grid.

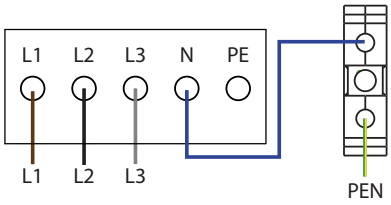

Figure 25: 4-pole connection

* Connect the overvoltage conductor with only one PE terminal.

EN

Authorised electrician

7.4.1 Connecting the PV generator

Connect the PV generator on the right of the connection area (see Figure 14 on page 20).
Use the provided cable fittings.

DANGER

Risk of fatal injury due to contact voltages.

› During installation: Electrically disconnect the DC positive and DC negative from the protective earth (PE).

Removing the plug connection before disconnecting the inverter from the PV generator may lead to injuries and damage the inverter.

› Disconnect the inverter from the PV generator using the integrated DC isolator switch.

› Remove the plug connector.

NOTE

Connected PV modules must be dimensioned for the DC system voltage in accordance with IEC 61730 Class A, but at least for the value of the AC grid voltage

Checking the PV generator for a ground fault

DANGER

Danger to life from electric shock!

› Only touch the PV generator cables on the insulation.

› Do not connect any strings with a ground fault to the unit.

Ensure that there is no ground fault

1. Determine the DC voltage between the
   - protective earth (PE) and the positive cable of the PV generator, and between the
   - protective earth (PE) and the negative cable of the PV generator.

If stable voltages can be measured, there is a ground fault in the DC generator or its wiring. The ratio between the measured voltages gives an indication as to the location of this fault.

2. Rectify any faults before taking further measurements.
3. Determine the electrical resistance between the
   - protective earth (PE) and the positive cable of the PV generator, and between the
   - protective earth (PE) and the negative cable of the PV generator.

In addition, ensure that the PV generator has a total insulation resistance of more than 2.0 MOhm, since the inverter will not feed in if the insulation resistance is too low.

4. Rectify any faults before connecting the DC generator.

NOTE

The threshold value from which the insulation monitor reports a fault can be set in the "Parameter" menu.

Insert string fuses (only for XL version)

When delivered, there are short circuit bridges inserted into the fuse holder of each of the DC positive inputs per MPP tracker. Nothing is fitted into the remaining fuse holders when delivered.

For the fitting of the fuse holders with string fuses, these items are with the inverter.

Authorised electrician

CAUTION

Damage to PV generator in case of faulty design of string fuses.

If the string fuses are too large, the PV generator can be damaged by excessive current.

Select suitable string fuses depending on possible short-circuit currents and the cable cross-sections used. Refer to this when using the string fuses supplied.

Delivery state as well as the type and number of the string fuses supplied:

Equipment types	Delivery state	Fuses supplied
Powador 30.0 - 60.0 TL3 XL	Short circuit bridge in string fuse 1 of MPP trackers 1, 2 and 3	12x PV fuse 10 x 38mm, 15 A, 1000V/DC
Powador 72.0 TL3 XL		15x PV fuse 10 x 38 mm, 15 A, 1000 V/DC

Insert string fuses

↻ Device switched OFF from DC isolator switch

1. Open fuse holder.
2. Remove and store short-circuit bridges.
3. Insert suitable string fuses into the DC positive fuse holders.
4. Close the fuse holders.

» Continue connecting the PV generator.

Recommended standard connection for Powador 39.0 TL3 XL/72.0 TL3 XL

DANGER

Risk of fatal injury due to electric shock (electric arc)!

Wrong assignment of MPP trackers will seriously damage the inverter.

Severe injury or death will result if the live connections are touched.

› Make sure that each MPP tracker can be disconnected from all poles.

› Observe recommended standard connection.

NOTE

The recommended standard connection is only applicable for version XL devices. This is the only device version with an integrated combiner box.

The strings connected to a MPP tracker must all have the same MPP voltage.

The MPP voltages of the three independently functioning MPP trackers 1, 2 and 3 may differ within the working area, however.

Electrical data for standard connection

	Number of modules per string	P_{max}	I_{max} per MPP tracker
39.0 TL3 XL	On each MPP tracker: $n_1=n_2=n_3=n_4$	per MPP tracker < 13 kW MPP trackers 1+2+3 together < 39 kW	<34.0 A
72.0 TL3 XL	On each MPP tracker $n_1=n_2=n_3=n_4=n_5$	per MPP tracker < 24 kW MPP trackers 1+2+3 together < 72 kW	<36.0 A

EN

Authorised electrician

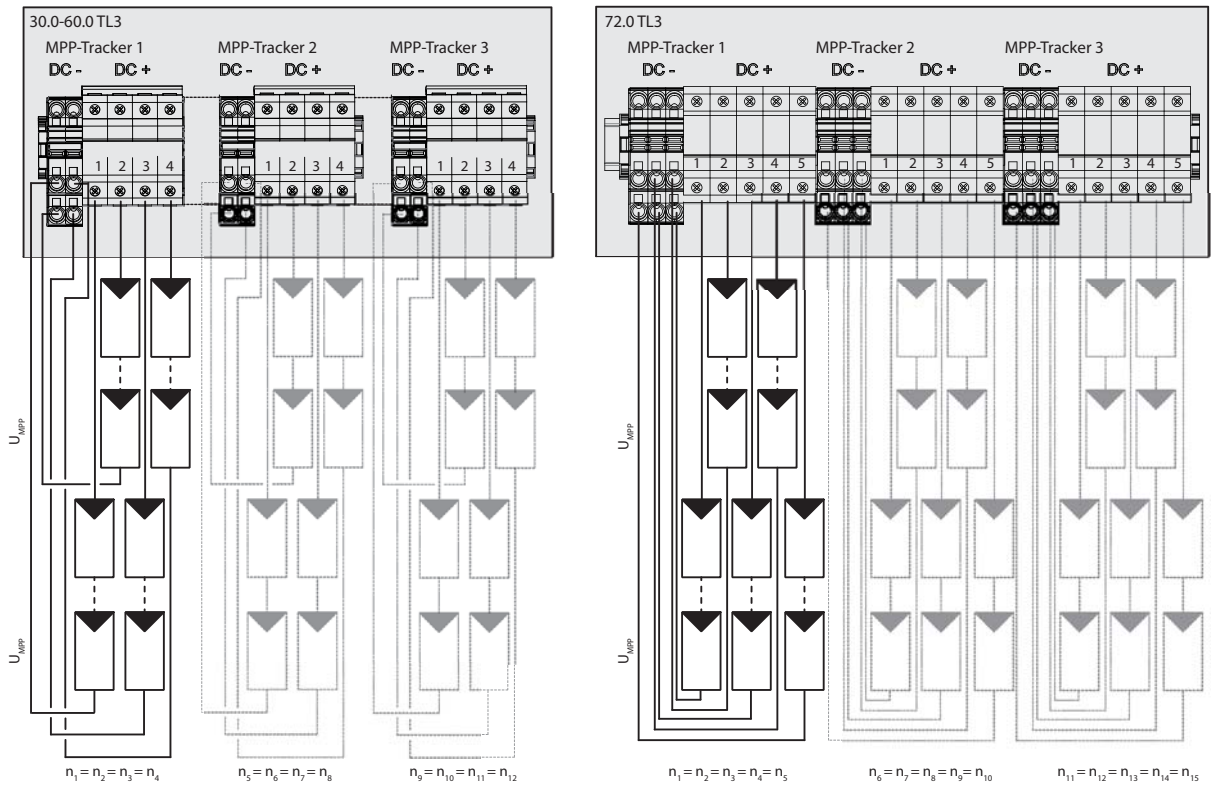

Figure 26: Recommended standard connection, XL variant (left: 39.0 TL3, right: 72.0 TL3)

Connecting the PV generator

DANGER

Danger to life from electric shock!

Severe injury or death will result if the live connections are touched. When there is solar radiation, DC voltage will be present at the open ends of the DC cables.

- Do not touch the exposed ends of the cables.
- Avoid short circuits.
- Check polarity and mark it accordingly before connecting to connection terminals.

Check polarity

↻ Use a measurement device with a input voltage range for DC at least 700 V.

1. Remove existing connection plugs.
2. Remove the insulation from the cable end and protect it against unintentional contact.
3. Set the input voltage range for DC at the device >1000V
4. Measure DC cables with the measurement device at the poles.

Note: The no-load voltage of the PV modules must never exceed 90 % of the max. input voltage of the device at an ambient temperature of more than 10 °C. Otherwise check the interconnection of the PV modules.

5. Mark DC wires in accordance with the polarity.

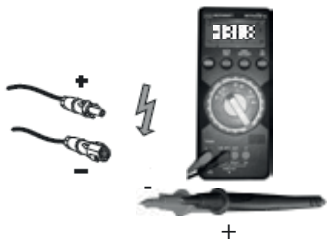

Figure 27: Tester

Connecting the PV generator

1. Unscrew the cable fittings.
2. Remove the outer cladding of the DC cables.
3. Insert the DC cables through the cable fittings into the connection area.

Authorised electrician

4. Strip the insulation from the DC cables.
5. Connect the ends of the cables to the DC connections according to the polarity.
6. Check secure fit of all connected cables.
7. Tighten the cable fittings.
8. The requirements of protection rating IP54 are met by closing the unused cable fittings with blind caps.

» The inverter is connected to the PV generator.

EN

7.5 Connecting the interfaces

All interfaces are located on the connection circuit board in the upper area of the inverter door. Use the cable fittings provided and connect the connection cables to the circuit board.

DANGER

Danger to life from electric shock!

Severe injury or death may result from improper use of the interface connections and failure to observe protection class III.

› The SELV circuits (SELV: safety extra low voltage) can only be connected to other SELV circuits with protection class III.

NOTE

When routing the interface connection cable, note that too little clearance to the DC or AC cables can cause interference during data transfer.

7.5.1 Determining the unit type

When connecting, be aware that the arrangement of the interface connections may be different from one equipment to another. Check the arrangement of the interface connections with the housing door open.

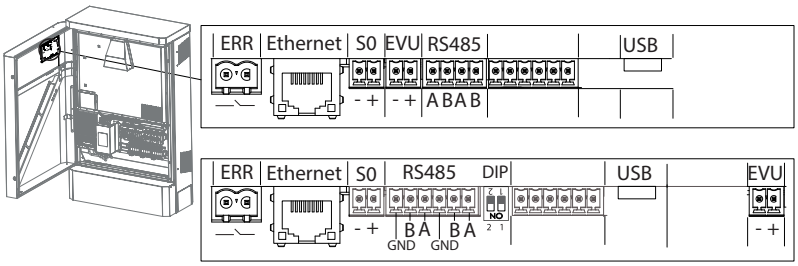

Figure 28: Connection area: connecting the interfaces. Top: variant 1. Bottom: variant 2.

7.5.2 Connecting the fault signal relay

The contact is designed as an N/O contact and is labelled "ERR" or "Relay" on the circuit board.

Maximum contact load	
DC	30 V/1 A

Connecting the fault signal relay

1. Unscrew the cable fitting.
2. Thread the connection cables through the cable fitting.
3. Attach the connection cables to the terminal clamps.
4. Tighten the cable fitting.

EN

Authorised electrician

7.5.3 Connecting the Ethernet interface

NOTE

The connection plug of an RJ45 cable is larger than the opening of an M25 cable fitting when it is installed. For this reason, remove the sealing insert before installation and thread the Ethernet cable outside of the cable fitting through the sealing insert.

NOTE

Use a suitable category 5 network cable. The maximum length of a network segment is 100 m. Ensure that the cable is correctly assigned. The Ethernet connection of the inverter supports auto-sensing. You can use both crossed and 1:1 protectively-wired Ethernet connection cables.

Connecting an Ethernet cable to the inverter

1. Loosen and remove the cover of the cable fitting.
2. Remove the sealing insert.
3. Thread the connection cable through the cover of the cable fitting and the sealing insert.
4. Insert the sealing insert into the cable fitting.
5. Connect the connection cable to Ethernet interface.
6. Attach and tighten the cover of the cable fitting.
7. Connect the provided ferrite clip above the cable fitting to the Ethernet cable.

Connecting the inverter to the network

↻ Connect the Ethernet cable to the inverter.

↻ Configure the Ethernet interface in the configuration menu.

☞ Connect the Ethernet cable to the network or a computer.

☞ Configure the Ethernet settings and the web server in the Settings menu.

7.5.4 Connecting the S0 output

An S0 pulse output is located on the communication board. Use this output to control accessories such as a large display, for example. The pulse rate of the output is adjustable.

Connecting the S0 output

1. Unscrew the cable fitting.
2. Thread the connection cables through the cable fitting.
3. Attach the connection cables to the terminal clamps.
4. Tighten the cable fitting.

NOTE

Ensure that the wires are properly connected. Communication is not possible if the wires are reversed.

7.5.5 Connecting the RS485 bus

NOTE

Ensure that the DATA+ and DATA- wires are properly connected. Communication is not possible if the wires are reversed.

Different manufacturers do not always interpret the standard on which the RS485 protocol is based in the same way. Note that the wire designations (DATA- and DATA+) for wires A and B may vary from one manufacturer to another.

EN

⚠ Authorised electrician

Wiring diagram

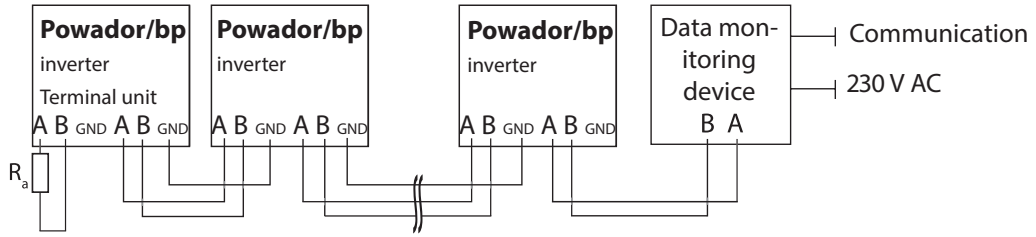

Figure 29: RS485 interface wiring diagram

Properties of the RS485 data line	
Maximum length of the RS485 bus line	The maximum permitted length of the RS485 bus is 1200 m. This length can be reached only under optimum conditions. Cable lengths exceeding 500m generally require a repeater or a hub.
Maximum number of connected bus devices	31 inverters + 1 data monitoring unit
Data line	Twisted, shielded. Recommendations: LI2YCYv (twisted pair) black for laying cable outside and in the ground, 2 x 2 x 0.5 LI2YCY (twisted pair) grey for dry and damp indoor spaces, 2 x 2 x 0.5

7.5.6 Connecting the RS485 bus

Connecting the RS485 bus

☞ To prevent interference during data transmission:

- Observe the wire pairing when connecting DATA+ and DATA- (see Figure 30)
- Do not lay RS485 bus lines in the vicinity of live DC/AC cables.

1. Unscrew the cable fitting.
2. Thread the connection cables through the cable fitting.
3. Connect the connection cables to the corresponding connection terminals (see Figure 28 on page 25).
4. The following must be connected to all inverters and to the data monitor unit in the same way:
   - Wire A (-) to wire A (-) and
   - Wire B (+) to wire B (+) (see Figure 29 on page 27)
5. Tighten the cable fitting.
6. Activate the terminating resistor on the terminal unit.

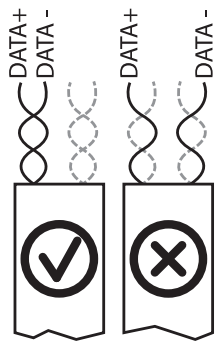

Figure 30: Assignment of twisted-pair wires

NOTE

When using the RS485 bus system, assign a unique address to every bus device (inverter, sensor) and terminate the terminal units (see the "Settings" menu) .

variant 1: activate the terminating resistor in the settings menu

1. Open the menu.
2. Select "Settings"/"Interface."
3. Activate terminating resistor in the "Bus termination" menu entry.
4. Confirm with "Enter".

variant 2: activate the terminating resistor with the switches on the circuit board

Activate the terminating resistor in the inverter that represents the terminal unit within your wiring diagram.

EN

Authorised electrician

NOTE

Always activate the RS485 terminating resistor in the terminal using DIP switch 2.

	Sample connection	DIP switch	Switch 1	Switch 2
The inverter is the terminal unit: ☞ Activate switch 2			OFF	ON
The inverter is not the terminal unit: ☞ Deactivate switch 2	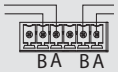		OFF	OFF

7.5.7 Connecting "Inverter Off" (optional)

NOTE

The Powador-protect digital output can only be used with suitable KACO inverters. When using devices from other manufacturers or in combination with KACO inverters, bus coupler circuit-breakers as a minimum must be used for shutting down devices from other manufacturers.

Connecting and activating "Inverter Off" digital input

↻ Can only be used with suitable KACO inverters.

1. Unscrew the cable fitting.
2. Thread the connection cables through the cable fitting.
3. Connect wire A (+) to the "EVU+" or the marked terminal on the first inverter via the "DO1" terminal of the Powador-protect.
4. Connect wire B (-) to the terminal marked "EVU-" on the first inverter via the "GND" terminal of the Powador-protect.
5. Connect the other inverters to one another as follows:
   – wire A (+) to wire A (+) and wire B (-) to wire B (-).
6. Tighten the cable fitting.
7. After commissioning: Activate the support for Powador protect in the parameter menu under the "Powador-protect" menu item.

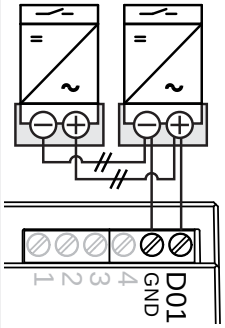

Figure 31:Powador-protect

7.6 Sealing the connection area

1. The requirements of protection rating are met by closing the unused cable fittings with blind caps.
2. Put on the lid for the connection area.
3. Close the housing door and lock it with a control cabinet key.

» The inverter has been mounted and installed.

» Start up the inverter.

7.7 Switching on the device

DANGER

Lethal voltages are still present in the terminals and cables of the inverter even after the inverter has been switched off and disconnected.

Severe injuries or death will occur when touching the cables and terminals in the inverter.

Only appropriately qualified and authorised electricians may start up the inverter.

Authorised electrician

FR

Attachment of safety label in accordance with UTE C 15-712-1

The code of practice UTE C 15-712-1 requires that, upon connection to the French low-voltage distribution network, a safety sticker showing a warning to isolate both power sources when working on the device must be attached to each inverter.

☞ Attach the provided safety sticker visibly to the outside of the inverter housing.

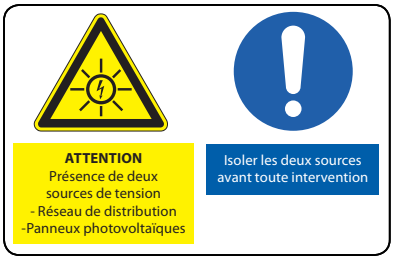

EN

7.7.1 Switching on the inverter

↻ The inverter has been mounted and electrically installed.

↻ The PV generator supplies a voltage above the configured start voltage.

1. Connect the grid voltage using the external circuit breakers.
2. Connect the PV generator using DC isolator switch (0 → 1).

» The inverter begins to operate.

» During initial start-up: Follow the instructions of the New Connection Wizard.

EN

8 Configuration and Operation

8.1 Controls

The inverter has a backlit LCD as well as three status LEDs. The inverter is operated using six buttons.

Figure 32: Control panel

Key			
1	"Operating" LED	5	4-way button
2	"Feed-in" LED	6	“Enter” key
3	"Fault" LED	7	“ESC” key
4	LCD		

8.1.1 LED indicators

The 3 LEDs on the front of the inverter show the different operating states.
The LEDs can display the following states:

	LED illuminated		LED flashing		LED not illuminated

The LED indicators show the following operating status:

Operating status	LEDs	Display	Description
Start			The green "Operating" LED is illuminated if an AC voltage is present, (independently of the DC voltage).
Feed-in start		Power fed into the grid or measured values	The green "Operating" LED is lit. The green "Feed-in" LED is illuminated after the country-specific waiting period*. The unit is ready to feed in, i.e. is on the grid. You can hear the grid relay switch on.
Feed-in operation		Power fed into the grid or measured values	The green "Operating" LED is lit. The green “Feed-in” LED is illuminated. The “Feed-in” icon appears on the LC display. The unit feeds into the grid.

* The waiting period ensures that all network parameters are in the permissible ranges.

EN

Operating status	LEDs	Display	Description
Non feed-in operation		Status message	The display shows the corresponding message.
Fault		Fault message	The display shows the corresponding message. The red "Fault" LED is illuminated.

8.1.2 Graphical display

The graphical display shows measured values and data and allows the configuration of the inverter using a graphical menu. In normal operation, the backlighting is switched off. As soon as you press one of the control buttons, the backlighting is activated. If no button is pressed for an adjustable period of time, it switches off again. You can also activate or deactivate the backlighting permanently.

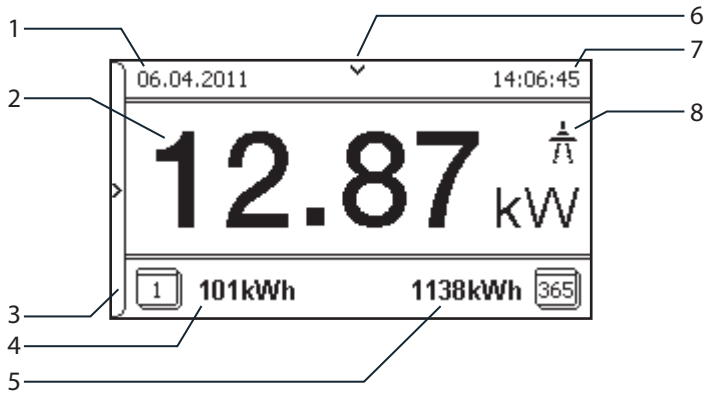

Figure 33: Desktop

Key			
1	Current date	5	Annual yield
2	Current power	6	Indicator for daily yield curve
3	Menu indicator	7	Current time
4	Daily yield	8	Feed-in indicator

After being switched on and after initial commissioning is complete, the inverter displays the start screen (the desktop). If you are in the menu and do not touch the control buttons for two minutes, the inverter returns to the desktop.
For initial commissioning, see section 8.2 on page 33.

NOTE

Depending on the tolerances of the measuring elements, the measured and displayed values are not always the actual values. However, the measuring elements ensure maximum solar yield. Due to these tolerances, the daily yields shown on the display may deviate from the values on the grid operator's feed-in meter by up to 15%.

NOTE

Calculating efficiency by measuring the current and voltage values can lead to misleading results due to the tolerances of the measurement devices. The sole purpose of these measured values is to monitor the basic operation of the system.

EN

8.1.3 Control buttons

The inverter is operated using the 4-way button and the Enter and ESC buttons.

Desktop

Opening the menu

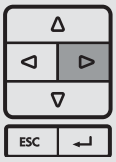

- ↻ The inverter is operating.
- ↻ The LCD is showing the desktop.
- ☞ Press the right arrow button.
- » The main menu opens.

Displaying the daily output

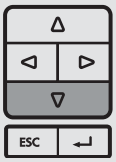

- ↻ The inverter is operating.
- ↻ The LCD is showing the desktop.
- ☞ Press the down arrow button.
- » The LCD displays the daily yield in a diagram.
- ☞ To return to the desktop, press any button.

Inverter menu

Selecting a menu option

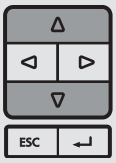

- ↻ You have left the desktop. The inverter displays the menu.
- ☞ Use the up and down arrow buttons.

Opening a menu item or a setting

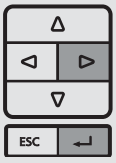

- ☞ Use the right arrow button and the Enter button.

Jump to the next higher menu level/discard changes

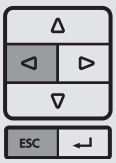

- ☞ Press the left arrow button or the ESC button.

Selecting an option

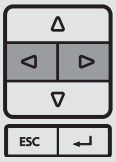

- ☞ Use the right and left arrow buttons.

Changing an option/the value of an input field

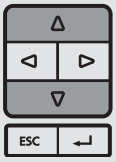

- ☞ Use the up and down arrow buttons.

Saving changed settings

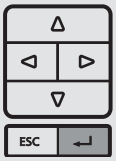

- ☞ Press the Enter button.

EN

8.2 Initial start-up

When started for the first time, the inverter displays the configuration assistant. It takes you through the settings necessary for the initial start-up.

NOTE

After configuration is completed, the configuration assistant does not appear again when the inverter is restarted. You can then change the country setting only in the password-protected parameter menu. The other settings can still be changed in the Settings menu.

NOTE

The DC and AC power supply must be guaranteed during configuration.

The sequence of the settings required for initial start-up is preset in the configuration assistant.

Navigation

- ☞ In order to select a setting, press the up and down buttons.
- ☞ To select the next menu item, press the Enter button.
- ☞ To return to the most recently selected menu item, press the ESC button.
- ☞ Set the required settings.
- ☞ Press the Enter button in the last menu item.

Initial configuration

- ☞ Select the menu language.
- ☞ Select the country of operation with grid type.
- ☞ Set the date and time.
- ☞ To store the set operator country and grid type permanently, confirm these settings with "Yes".
- » You have completed the initial configuration. The inverter begins to operate.

8.3 Menu structure

8.3.1 Display on the LCD

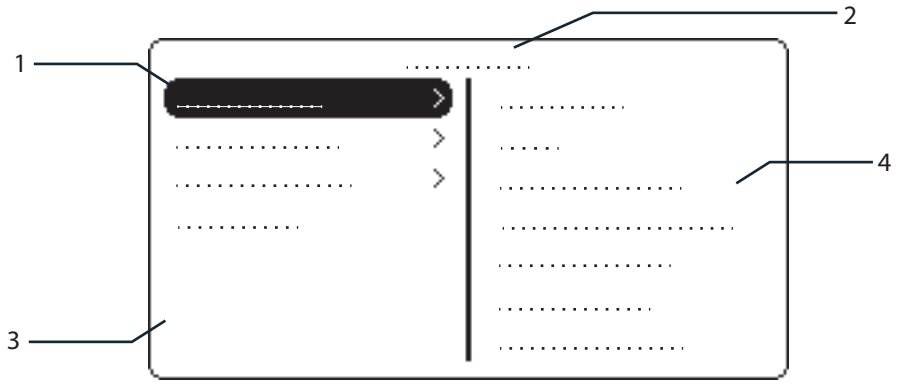

Figure 34: Main menu

Key

1	Selected menu item	3	Menu items of the active menu level
2	Name of the active menu level	4	Menu items of the next lower menu level

EN

8.3.2 Menu structure

NOTE

The menu items displayed on-screen are dependent on the country and network settings, and may vary according to the type of device.

Icons used:

1 2 3 4	Menu level (0, 1, 2, 3)	↳	Submenu available
	Display menu	**EN**	Country-specific setting
	Option menu	**FR-HTA**	Country and grid type-specific setting
	Password protected menu (password can be requested from KACO Service)		

Country-spec. setting	menu level	Display/ setting	Action in this menu/meaning
All countries	Desktop	**Desktop**	↳ ☞ Press the right arrow button.
	1 2 3 4	**"Measurements" menu**	↳ ☞ Open the menu: Press the right arrow button or the Enter button.
	1 2 3 4	**Generator**	Displays the DC-side voltage, amperage and power.
	1 2 3 4	**Grid**	Displays the AC-side voltage, amperage and power.
	1 2 3 4	**Power control**	Displays the current value of the external power limitation by the grid operator.
	1 2 3 4	**cos-phi**	Indicates the status of the reactive power control.
	1 2 3 4	**Unit temperature**	Displays the temperature in the inverter housing.
	1 2 3 4	**Yield counter**	Displays the yield in kWh. ☞ Reset the counter using the "Reset" key.
	1 2 3 4	**Yield today**	Displays the cumulative yield for the current day.
	1 2 3 4	**Total yield**	Displays the total yield up to now.
	1 2 3 4	**CO2 savings**	Displays the calculated CO_2 savings (in kg).
	1 2 3 4	**Oper. hrs cntr**	Displays the duration of operation in hours. ☞ Reset the counter using the "Reset" key.
	1 2 3 4	**Oper. time today**	Displays the duration of operation on today's date.
	1 2 3 4	**Total oper. time**	Displays the total operating time.
	1 2 3 4	**Log data display**	☞ Open the menu: Press the right arrow button or the Enter button. ↳ ☞ Measurement data can be transferred to a USB stick by selecting it and moving it.

EN

Country-spec. setting	menu level	Display/ setting	Action in this menu/meaning
All countries	1 2 3 4	**Day display**	Displays the recorded operating data graphically. 1. Select the measured value to be displayed. Supported measured values: – Grid power P(grid) – DC power per string P(PV) 1-3 – DC voltage per string U(PV) 1-3 – Unit temperature 2. Select a day. 3. Press the Enter button. » The display shows the selected data. ☞ Press any button to return to the previous menu.
	1 2 3 4	**Month display**	Displays the recorded operating data graphically. 1. Select a month. 2. Press the Enter button. » The display shows the selected data. ☞ Press any button to return to the previous menu.
	1 2 3 4	**Year display**	Displays the recorded operating data graphically. 1. Select a year. 2. Press the Enter button. » The display shows the selected data. ☞ Press any button to return to the previous menu.
	1 2 3 4	**CSV log data**	☞ Open the menu: Press the right arrow button or the Enter button.
	1 2 3 4	**Decimal separator**	☞ Select decimal sign for export of saved operating data.
	1 2 3 4	**Save to USB**	In this menu, you can export the saved operating data to a connected USB storage device. ↻ You have connected a USB storage device to the inverter. 1. Select the data to be exported (year, month or day). 2. Press the Enter button. » The inverter writes the data to a connected USB storage device.
All countries	1 2 3 4	**"Settings" menu**	☞ Open the menu: Press the right arrow button or the Enter button.
	1 2 3 4	**Language**	☞ Select the desired language for the user interface.
	1 2 3 4	**Def. total yield**	☞ Set the total yield to any value. (If you want to continue the recording from the present value on a replacement unit). ☞ Select the "Save" button and confirm with the Enter button.

EN

Country-spec. setting	menu level	Display/ setting	Action in this menu/meaning
All countries	1 2 3 4	**Interface**	☞ If the inverter is a terminal unit: Activate termination ("Bus termination" menu option) ☞ Assign a unique RS485 bus address ("RS485 address" menu option). **NOTE:** The menu option "bus termination" is only displayed in the supported function. The RS485 address must not be the same as that of any other inverter or a data monitor device.
	1 2 3 4	**S0**	☞ Open the menu: Press the right arrow button or the Enter button.
	1 2 3 4	**Activation**	☞ Activate S0.
	1 2 3 4	**Pulse rate**	☞ Set the pulse rate of the S0 connection.
	1 2 3 4	**Priwatt**	☞ Open the menu: Press the right arrow button or the Enter button.
	1 2 3 4	**Activation mode**	☞ Activate/deactivate the "Priwatt" function ☞ Select operating mode **NOTE:** Re-activation depends on the operating mode selected and on the activation conditions.
	1 2 3 4	**Monitoring time**	☞ Set time span during which the power threshold must be exceeded without interruption.
	1 2 3 4	**Power threshold**	☞ Set power threshold from which the monitoring time up to activation begins.
	1 2 3 4	**Operation mode**	☞ Power-dependent: the function remains active until below the set power threshold. ☞ Time-dependent: The function is active depending on the sunlight for the set operating time.
	1 2 3 4	**Operation time**	**NOTE:** The menu option is only available in the "Time-dependent" operation mode. ☞ After connection, the function is active for the set operating time.
	1 2 3 4	**Quick start**	☞ Reduce the waiting times during the self-test by pressing the "Activate" key.
	1 2 3 4	**Logging interval**	☞ Specify the time period between 2 log data recordings.
	1 2 3 4	**Log data backup**	**NOTE:** The unit supports the backing up of all recorded yield data to a connected USB storage device. ☞ Activate or deactivate log data backup.
	1 2 3 4	**Display**	☞ Configure the contrast setting for the display. ☞ Set the length of time without user input after which the backlighting switches off. ☞ Alternatively: Permanently activate or deactivate the backlighting by selecting "On" or "Off".

EN

Country-spec. setting	menu level	Display/ setting	Action in this menu/meaning
All countries	1 2 3 4	**Date & time**	☞ Set the date and time. **NOTE:** For self-diagnostic purposes, the inverter carries out a daily restart at midnight. To avoid having a restart occur during feed-in operation and to always obtain reliable log data, ensure that the time is correctly set.
	1 2 3 4	**Network**	☞ Open the menu: Press the right arrow button or the Enter button.
	1 2 3 4	**DHCP**	Activate or deactivate DHCP. ☞ On: Activate DHCP. Once the DHCP server becomes available, the IP address, subnet mask, gateway and DNS server are automatically applied and the afore-mentioned menu items are hidden. ☞ Off: DHCP deactivated, make settings manually.
			NOTE: The "IP address", "Subnet masks", "Gateway" and "DNS server" menu options are only displayed with the DHCP deactivated.
	1 2 3 4	**IP address**	☞ Allocate a unique IPv4 address in the network.
	1 2 3 4	**Subnet mask**	☞ Assign a subnet mask.
	1 2 3 4	**Gateway**	☞ Enter IPv4 address of gateway.
	1 2 3 4	**DNS server**	☞ Enter IPv4 address of DNS server.
	1 2 3 4	**Web server**	☞ Open the menu: Press the right arrow button or the Enter button.
	1 2 3 4	**Operation mode**	☞ Activate or deactivate the integrated web server.
	1 2 3 4	**Port**	☞ Set the accessible port on the web server.
	1 2 3 4	**Remote config**	☞ If necessary, activate the remote configuration (on/off)
	1 2 3 4	**Remote update**	☞ If necessary, activate the remote update (on/off)
	1 2 3 4	**Powador-web**	☞ On: The inverter attempts to connect to the Powador-web web portal. ☞ Off: The connection to Powador web is deactivated.
	1 2 3 4	**Portal**	☞ Select/set screen with portal configurations
	1 2 3 4	**Modbus TCP**	☞ Open the menu: Press the right arrow button or the Enter button
	1 2 3 4	**Operation mode**	☞ Activate/deactivate function.
	1 2 3 4	**Port**	☞ Set network port.
	1 2 3 4	**Connection status**	Indicates the status of the network connection:

EN

Country-spec. setting	menu level	Display/ setting	Action in this menu/meaning
All countries	1 2 3 4	**"Parameters" menu**	☞ Press the right arrow button or the Enter button. **NOTE:** The inverter does not display the "Parameters" menu in the standard configuration. To display the Parameters menu: 1. Open the menu. 2. Simultaneously hold down the up and down buttons for several seconds.
	1 2 3 4	**Country**	1. Enter the four-digit password using the 4-way button. The password is unit-specific. 2. Confirm the entry with the Enter button. 3. Set the desired country setting. **NOTE:** This option influences the country-specific operating settings of the inverter. Please consult KACO service for further information.
DE, CH, ES, FR, GB, GR, IT, JO, TH, ZA	1 2 3 4	**Grid type/ guideline**	☞ Select the grid type for the inverter's installation location.
UD	1 2 3 4	**Grid voltage**	☞ Set the specified grid voltage for the site where the unit is used (please contact KACO Service)
All countries	1 2 3 4	**Grid parameters**	☞ Open the menu: Press the right arrow button or the Enter button.
DE-NS🔒, AT, BE🔒, BG, CY🔒, CH-NS🔒, CZ , DK🔒, FR (apart from FR-HTA), IE, IT, NL, PT, PL, TR, UD	1 2 3 4	**Overvoltage shutdown, 10 minute mean value**	☞ Activate or deactivate password protection. (🔒) ☞ Specify the shutdown threshold for overvoltage shutdown. The 10-minute average for the measured voltage as per EN50160 is used. ☞ Set period from occurrence of the fault to shutdown of the inverter.
CZ, BG, FR(apart from FR-HTA), NL, PT, TR	1 2 3 4	**Voltage drop**	The voltage drop between the inverter and the feed-in meter is added to the limit value that was set for grid shutdown according to EN 50160. The limit value can be set in 1 V increments. ☞ Specify the switch-off value for the voltage drop.
DE-MS, AT, CH-MS, ES-661, ES1699, ES-PO123 FR-HTA, GB-G59/3, HR, HU, IE, IL, IN, IT, JO-59-3, PL, RO, TH, ZA, UD	1 2 3 4	**Overvoltage shutdown**	☞ Specify the shutdown threshold for fast and slow overvoltage shutdown. ☞ Set period from occurrence of the fault to shutdown of the inverter.
	1 2 3 4	**Undervoltage shutdown**	☞ Specify the shutdown threshold for fast and slow undervoltage shutdown. ☞ Set period from occurrence of the fault to shutdown of the inverter.
AT, FR-HTA, GB-G59/3, IE, IT, JO-G59-3, PL, RO, TH, ZA, UD	1 2 3 4	**Overfrequency shutdown**	☞ Set limit value for the slow and fast overfrequency shutdown.

EN

Country-spec. setting	menu level	Display/ setting	Action in this menu/meaning
AT, FR-HTA, GB-G59/3, JO-G59-3, PL, RO, IE, IN, IT, TH, UD, ZA	1 2 3 4	**Underfrequency shutdown**	☞ Set limit value for the slow and fast underfrequency shutdown.
AU, ES-1663, GR, KR	1 2 3 4	**Voltage shutdown**	The inverter is equipped with redundant 3-phase monitoring. If the grid frequency exceeds or drops below the configured values, the inverter switches off. The minimum switch-off threshold can be set in 1 V increments. ☞ Configure the switch-off values for undervoltage and overvoltage. ☞ Where necessary, set period from occurrence of the fault to shutdown of the inverter.
DE-MS, AU, BG, CH-MS, CZ, DE-MS, ES, FR (apart from FR-HTA), GR, HR, HU, IL, KR, NL ,PT, TR	1 2 3 4	**Frequency shutdown**	The inverter continuously monitors the grid frequency. If the grid frequency exceeds or drops below the configured values, the inverter switches off. ☞ Set limit values for underfrequency and overfrequency in 0.1 Hz increments. ☞ Set period from occurrence of the fault to shutdown of the inverter.
AT, CH-MS, DE-MS, FR-HTA, IE, IL, IN, IT, PL, RO, TH, ZA, UD	1 2 3 4	**Activation condition**	The inverter checks mains voltage and frequency. The grid feed operation begins if the measured values are within the set ranges. ☞ Set minimum and maximum values for switching on.
AT, CH,DE, DK, BE, FR-HTA, GB, IL, IN, IT, IE, AT, CY, CZ, JO-G59/3, PL, RO, ES-PO123, TH, TW, ZA, UD	1 2 3 4	**Connect time**	☞ Set period for grid observation (in seconds) when switching on and reconnection after a fault.
Further information on: Grid parameters	1 2 3 4		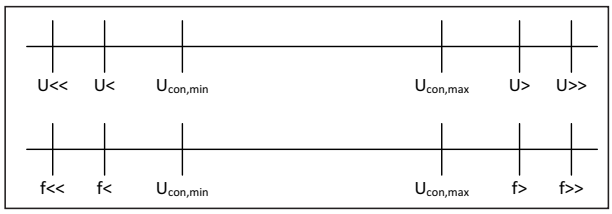 ☞ If the value U< (slow undervoltage shutdown) is set to a value which is greater than the value of Ucon,min (minimum restart voltage) using the LC display, then the value of Ucon, min. is automatically set to the value of U<.

EN

Country-spec. setting	menu level	Display/ setting	Action in this menu/meaning
	1 2 3 4		☞ If the value U> (slow overvoltage shutdown) is set to a value which is smaller than the value of Ucon,max (maximum restart voltage) using the LC display, then the value of Ucon, max. is automatically set to the value of U>. ☞ If the value f< (slow underfrequency shutdown) is set to a value which is greater than the value of fcon,min (minimum restart frequency) using the LC display, then the value of fcon, min. is automatically set to the value of U<. ☞ If the value f> (slow overfrequency shutdown) is set to a value which is smaller than the value of fcon,max. (maximum restart frequency) using the LC display, then the value of fcon, max. is automatically set to the value of f>.
All countries	1 2 3 4	**DC starting volt.**	The inverter begins feed-in as soon as this DC voltage is present. ☞ Set the starting voltage.
	1 2 3 4	**DC-OVP-Monitor.**	Allows the monitoring of the integrated overvoltage protection. ☞ Activate overvoltage protection. **NOTE:** By activating, an overvoltage protection test is carried out with an appropriate status message.
	1 2 3 4	**Const. volt. ctrl.**	Possibility to deactivate the MPP seek mode in order to operate the device with a constant DC voltage. ☞ Activate or deactivate the constant voltage controller. ☞ Set value for constant voltage control.
All countries	1 2 3 4	**Power limitation**	The output power of the inverter can be set permanently to a lower value than the maximum output power by the internal power limiting. This may be necessary in order to limit the maximum power rating of the system at the grid connection point, upon the grid operator's request. The value can be protected from the very first output limitation entry. After setting a limitation, the value can only be changed by entering a device-specific password. 1. Activate or deactivate password protection 2. Specify activation status (on/off) 3. Specify the limit value for maximum feed-in power. 4. Confirm the entry with the Enter button.

Country-spec. setting	menu level	Display/ setting	Action in this menu/meaning
All countries	1 2 3 4	**Powador-protect**	Configures the support for grid shutdown by a Powador protect connected to the digital input of the inverter. ↻ For Auto/On: A Powador protect is operating in the photovoltaic system and is connected to the inverter at the digital input/output. ☞ Auto: The inverter automatically detects a Powador-protect integrated into the photovoltaic system. ☞ On: The digital signal of the Powador protect must be present to the digital input of the inverter for the inverter to start with feed-in. ☞ Off: The inverter does not check whether a Powador-protect is integrated into the PV system.
	1 2 3 4	**Iso.resistor**	☞ Set threshold value (in 1 kOhm steps) at which the insulation monitor reports a fault.
All countries	1 2 3 4	**Power reduction P(f)**	☞ Specify activation mode (1 or 2). (not for IL, IT)
	1 2 3 4	**P(f) thresholds**	☞ Separate activation and deactivation threshold. ☞ Power reduction P(f) – a. Specify activation mode (mode 1 / mode 2 / off) – b. Specify activation threshold (if mode 1 or mode 2 is active) – c. Specify deactivation threshold (if "mode 1" is active) – d. Deactivation time (if "mode 1" is active) – e. Gradient (if mode 1 or mode 2 is active) – f. Deliberate delay (if mode 1 or mode 2 is active)
	1 2 3 4	**P(f) Deactivation time**	☞ Specify the time taken to shut down the power reduction function in mode 1 (not for IL, IT)
	1 2 3 4	**P(f) Gradient**	☞ Set gradient of power limit function with increasing frequency in % / Hz. This percentage relates to the nominal frequency.
	1 2 3 4	**P(f) Deliberate delay**	☞ Set the power reduction delay in seconds.
DE-MS, AT ,CH-MS, ES-PO123, FR-HTA, PL, IE, RO, TH, ZA-NERSA, UD	1 2 3 4	**Fault ride-through (FRT)**	The inverter supports dynamic grid stabilisation (Fault Ride-Through). The following parameters can be set:
	1 2 3 4	**Operation mode**	☞ Specify the operation mode
	1 2 3 4	**Dead band**	☞ Set the dead band
	1 2 3 4	**Dead band mode**	☞ Specify the dead band mode

EN

Country-spec. setting	menu level	Display/ setting	Action in this menu/meaning
	1 2 3 4	**Constant k**	☞ Set constant k
	1 2 3 4	**Dynamic blind current**	☞ Activate dynamic blind current
All countries	1 2 3 4	**Reactive power**	☞ Open the menu: Press the right arrow button or the Enter button. ☞ Activating idle power process: select process and press Enter. The active process is highlighted.
	1 2 3 4	**cos-phi specification**	☞ Configure power factor. ☞ If a power factor not equal to 1 is selected: Select the type of phase shift (under-excited/over-excited).
	1 2 3 4	**Q const.**	☞ Set the idle power Q (in %) to a fixed value. ☞ Select the type of phase shift (under-excited/over-excited).
	1 2 3 4	**cos-phi(P/Pn)**	☞ Open the menu: Press the right arrow button or the Enter button.
	1 2 3 4	**Lock-in voltage**	☞ Power range set as % of rated voltage, where the network support process is active.
	1 2 3 4	**Lock-out voltage**	
	1 2 3 4	**Number of support points**	This option defines the number of support points that can be configured in the subsequent menu. The maximum number of configurable support points depends on the selected grid type. ☞ Specify the number of support points for the idle power characteristic curve.
	1 2 3 4	**1., 2. ...Support point**	☞ Specify the power factor for the 1st, 2nd (etc.) support point ☞ If a power factor not equal to 1 is selected: Select the type of phase shift (under-excited/over-excited).
	1 2 3 4	**3rd,... 10. Node (optional)**	☞ Power factor for the 3rd, 4th,... support point ☞ If a power factor not equal to 1 is selected: Select the type of phase shift (under-excited/over-excited).
	1 2 3 4	**Q(U) 10 support points**	☞ Open the menu: Press the right arrow button or the Enter button.
	1 2 3 4	**Lock-in power**	☞ Power range set as % of rated power, in which the network support process is active.
	1 2 3 4	**Lock-out power**	
	1 2 3 4	**Transient time**	☞ Set the response speed of the control.
	1 2 3 4	**Downtime**	☞ Set the deliberate delay for the start of the Q(U) function.
	1 2 3 4	**Resetting the curve**	☞ Resetting the active curve to reduce active power

EN

Country-spec. setting	menu level	Display/ setting	Action in this menu/meaning
All countries	1 2 3 4	**1. Support point** **2. Support point**	☞ Specify the power factor for the 1st, 2nd support point ☞ If a power factor not equal to 1 is selected: Select the type of phase shift (under-excited/over-excited).
	1 2 3 4	**3rd,... 10. Node (optional)**	☞ Power factor for the 3rd, 4th,... support point ☞ If a power factor not equal to 1 is selected: Select the type of phase shift (under-excited/over-excited).
BE, CH-NS, CY, DE-NS, DK, UD, TW	1 2 3 4	**Line error**	Display of grid faults. ☞ To show the last 5 grid fault messages, select the "Display" key.
AT, BE, CH-NS, CY, DE-NS, DK, GB-G83-2, UD	1 2 3 4	**Protection parameters**	Display of essential protection parameters. ☞ To show the protection parameters, select the "Display" key.
All countries	1 2 3 4	**"Information" menu**	☞ Open the menu: Press the right arrow button or the Enter button.
	1 2 3 4	**Inv. type**	Displays the type designation of the inverter. If feed-in power is actively limited: display maximum power in kW.
	1 2 3 4	**SW version**	Displays the installed software version.
	1 2 3 4	**Serial no.**	Displays the serial number of the inverter.
	1 2 3 4	**Display country**	Displays the selected country setting. Optional: Displays the grid type if a grid type has been selected.
	1 2 3 4	**"Manufacturer" menu**	↳ The display shows information about the unit manufacturer.

8.4 Monitor inverter

The inverter has an integrated web server. This makes it possible to monitor and record the operating state and yield of your PV system.

You can display the recorded data using:

- The integrated LCD
- The integrated web server using an Internet-capable device connected to the Ethernet interface of the inverter
- A storage medium connected to the USB interface, for example, a USB stick.

8.4.1 USB interface

Use an external USB storage device to read operating data saved in the inverter.

Reading log data

NOTE

The USB interface is approved solely for use with USB flash storage devices ("USB sticks"). The maximum available current is 100 mA. If a device with a higher power requirement is used, the power supply for the USB interface automatically shuts down to protect the inverter from damage.

EN

Reading data

1. Connect a suitable USB storage device to the USB interface on the communication circuit board.
2. Open the "Log data display" menu.
3. Select the "Save to USB" item.
4. Select the desired log data using the 4-way button.
5. Press the Enter button.

» The inverter saves the selected log data to the USB storage device.

8.4.2 Web server

The inverter has an integrated web server. After configuring the network and activating the web server in the Settings menu, you can open the web server from an Internet browser. The language version of the website delivered by the web server is adapted dynamically to the pre-set language preferences in your Internet browser. If your Internet browser requests a language that is unknown to the inverter, the web server uses the menu language set in the inverter.

Setting up the web server

Configuring the Ethernet interface

↻ You have connected the inverter to your network.

☞ When using a DHCP server: Activate DHCP.

☞ For manual configuration (DHCP off):

1. Open the Settings/Network menu.
2. Assign a unique IP address.
3. Assign a subnet mask.
4. Assign a gateway.
5. Assign DNS server.
6. Save your settings.

Using the web server

To avoid problems with incompatibility, use the most recent version of your Internet browser. JavaScript must be enabled in the browser settings to display the web server correctly.

NOTE

You can also access the web server of the inverter via the Internet. To do this, additional settings of your network configuration, particularly your Internet router, are required.

Note that communication with the inverter is carried out over an unsecured connection, particularly in the case of a connection over the Internet.

Calling up the web server

↻ Configure the Ethernet interface.

↻ Connect the Ethernet cable.

1. Open an Internet browser.
2. In the address field of the Internet browser, enter the IP address of the inverter and open the site.

» The Internet browser displays the start screen of the web server.

After it has opened, the web server displays information about the inverter as well as the current yield data. The web server enables the following measurement data and yield data to be displayed:

• Feed-in power	• Generator power
• Status	• Generator voltage
• Grid power	• Unit temperature
• Grid voltage	

EN

In order to display and export yield data, proceed as follows:

Select the display period

1. Open the web server.
2. Select the display period by choosing either daily view, monthly view, yearly view or overview.

Filtering display data (daily view only)

1. Open the web server.
2. Select daily view.
3. To show or hide measured values, select or deselect the corresponding checkboxes in the “Select display” area.

Exporting data

1. Filter the display data if necessary.
2. Select the display period if applicable (daily, monthly, yearly or overview).
3. Press the "Export data" button.
4. Save the file.

NOTE

Regardless of the display data selected in the “Select display” area, an export file always contains all measurement data and yield data available for the selected period.

8.5 Performing the software update

You can update the software of the inverter to a new version using the integrated USB interface. Use a FAT32-formatted USB stick to do this. Do not use any storage media with an external power supply (for example: an external hard disk).

NOTE

Ensure that the power supply of the AC and DC sides is active. It is only possible to update all of the inverter’s components to the most current software version in this operating state.

CAUTION

Damage to the inverter

The update can fail if the power supply is interrupted during the update process. Parts of the software or of the inverter itself can then be damaged.

» Never disconnect the DC and AC power supply during a software update.

» Do not remove the USB stick during a software update.

Preparing for the software update

1. Download the software update file from the KACO web site and store it on your hard disk.
2. Copy the update file (.KUF) onto the USB stick.

» Perform software update.

EN

NOTE

The update can take several minutes. The "Operating" LED flashes during the update process. The inverter may restart several times.

The following message appears if the DC power supply is too low: “DC power supply too low! Perform update anyway?”. In this case, select “No” and perform the update with a stable voltage supply.

Performing the software update

↻ Prepare for the software update.

1. Connect the USB stick to the inverter.

» The message “Software found. Would you like to load it?” appears on the display.

2. If you would like to perform the update, select the "Yes" button. In the case of “No”, pressing the “Enter” button stops the update process and the unit goes into feed-in mode.

» The inverter begins the update.
- The update has been imported in full once the message "Software update successful" appears.
- The update has failed if the message “Software update incomplete" appears.

3. When a fault occurs, the update process must be repeated.

Alternatively, you can check to see if the update was successful in the menu:

Displaying the software version

☞ Open the Information / Software Version menu.

» The inverter will display the versions and checksums of the software that is currently loaded.

9 Maintenance/Troubleshooting

9.1 Visual inspection

Inspect the inverter and the cables for exterior visible damage and note the operating status display of the inverter. In case of damage, notify your installer. Repairs may only be carried out by authorised electricians.

NOTE

There are components in the housing of the inverter which may only be repaired by our KACO customer service team.

The inverter should be checked for proper operation by a qualified electrician at regular intervals.

9.2 Cleaning the housing

DANGER

Lethal voltages in the inverter.

Serious injuries or death can result if moisture enters the system.

› Only use completely dry objects to clean the inverter.

› Only the exterior of the inverter should be cleaned.

Cleaning the inverter

☞ Do not use compressed air.

☞ Use a vacuum cleaner or a soft brush to remove dust from the fan cover and from the top of the inverter on a regular basis.

☞ Remove dust from the ventilation inlets if necessary.

Authorised electrician

9.3 Shutting down for maintenance and troubleshooting

DANGER

Lethal voltages are still present in the terminals and cables of the inverter even after the inverter has been switched off and disconnected.

Severe injuries or death will occur when touching the cables and terminals in the inverter.

Only appropriately qualified and authorised electricians may open and maintain the inverter.

› Observe all safety regulations and the current technical connection specifications from the relevant power supply company.

› Disconnect the AC and DC sides. Secure the AC and DC sides from being inadvertently switched back on.

DANGER! The DC cables are still live.

› After shutdown, wait at least 10 minutes before working on the inverter.

DANGER

Risk of fire if the fuse holder is disconnected in a live state!

The connection terminals and fuse holder can be destroyed by arcing if disconnected or if the fuses are removed.

› Observe the following shutdown sequence:

1. Switch off the grid voltage by turning off the external circuit breakers.
2. Switch off the PV generator using the DC isolator switch.

DANGER! The DC cables are still live.

3. Check that there is no current in any of the DC cables using a clip-on ammeter.
4. Only open the fuse holder once you have established that there is no current in the DC cables.
5. Ensure that there is no voltage present on the grid connection terminals.

9.4 Disconnecting connections

9.4.1 Disconnecting the AC connection

DANGER

Danger to life from electric shock!

Never disconnect the connection plug and plug connector under load.

› Switch off the grid voltage by turning off the external circuit breakers before you detach the AC cables from the screw terminal.

› Make sure that the device is isolated from the public power supply and the system power supply before starting work.

Disconnecting the AC connection

↻ Ensure there is no AC voltage present.

1. Loosen cable fitting.
2. Detach cables (L1/L2/L3/N) from the AC connection terminal.
3. Detach the PE line from the potential compensation of lightning protection system.
4. Loosen the cable fitting and pull the cables out through the cable fitting.

EN

9.4.2 Disconnecting the DC connection

DANGER

Danger to life from electric shock!

Never disconnect the connection plug and plug connector under load.

› Follow the sequencing sequence for PV generator and DC disconnection. Only after performed

› Measure the current free, open the fuse holder and release the DC connection.

Disconnecting the DC connection

1. Ensure electricity-free with a forceps perimeter.
2. Disconnect the DC cables to the PV + and PV terminals.
3. Loosen the cable gland and pull the PV cable through a cable gland.
4. Mount the contact protection on the PV + and PV terminal.
5. Cover the DC cable ends with protective caps.

9.5 Faults

9.5.1 Procedure

DANGER

Lethal voltages are still present in the terminals and cables of the inverter even after the inverter has been switched off and disconnected.

Severe injuries or death will occur when touching the cables and terminals in the inverter.

☞ When a fault occurs, notify an appropriately authorised and qualified electrician or KACO new energy GmbH Service.

☞ The operator can only carry out actions marked with a B.

☞ In case of power failure, wait for the system to automatically restart.

☞ Notify your electrician if there is an extended power failure.

9.5.2 Rectifying a fault

B = Action of the operator

E = The indicated work may only be carried out by an authorised electrician.

K = The indicated work may only be carried out by a service employee of KACO new energy GmbH!

Fault	Cause of fault	Explanation/remedy	By
The display is blank and the LEDs do not light up.	Grid voltage not available	☞ Check whether the DC and AC voltages are within the permitted limits (see Technical Data).	E
		☞ Notify KACO Service.	E
The inverter stops feeding into the grid shortly after being switched on, even though there is sunlight present.	Faulty grid separation relay in the inverter.	If the grid separation relay is defective, the inverter will recognise this during the self-test.	
		☞ Ensure that there is sufficient PV generator power.	E
		☞ If the grid separation relay is defective, have it replaced by KACO Service. ☞ Notify KACO Service.	E

Table 7: Troubleshooting

EN

Fault	Cause of fault	Explanation/remedy	By
The inverter is active but is not feeding into the grid. The display indicates a line failure.	Grid-feed is interrupted due to a grid fault.	Due to a grid fault (grid impedance too high, over/undervoltage, over/underfrequency), the inverter stopped the feed-in process and disconnected from the grid for safety reasons.	
		☞ Change the line parameters within the permitted operating limits (see the "Start-Up" section).	E
The grid fuse trips.	The grid fuse capacity is too low.	In case of a high level of solar radiation, the inverter exceeds its rated current for a short period, depending on the PV generator.	
		☞ Select the capacity of the inverter's pre-fuse to be somewhat higher than the maximum feed-in current (see the "Installation" section).	E
		☞ Contact the grid operator if the grid failure continues to occur.	E
	Damage to the inverter's hardware.	If the grid fuse trips immediately when the inverter goes into feed-in mode (after the start-up period is complete), the inverter's hardware is probably damaged.	
		☞ Contact KACO Service to test the hardware.	E
Inverter displays an impossible daily peak value.	Faults in the grid.	The inverter continues to operate as normal without losses to the yield, even when an erroneous daily peak value is displayed. The value is reset overnight.	
		☞ To reset the value immediately, switch the inverter off by disconnecting it from the grid and switching off the DC, then switch it back on.	E
Daily yields do not correspond to the yields on the feed-in meter.	Tolerances of the measuring elements in the inverter.	The measuring elements of the inverter have been selected to ensure maximum yields. Due to these tolerances, the daily yields shown may deviate from the values on the feed-in meter by up to 15%.	
		☞ No action	-
The inverter is active but is not feeding into the grid. Display: "Waiting for feed-in"	• Generator voltage too low • Grid voltage or PV generator voltage unstable.	• The PV generator voltage or power is not sufficient for feed-in (solar radiation is too low). • The inverter checks the grid parameters before the feed-in process begins. The length of time it takes to switch back on again differs from country to country, depending on applicable standards and regulations, and may be several minutes. • The starting voltage may have been set incorrectly.	
		☞ Adjust starting voltage in the Parameter menu if required.	K

Table 7: Troubleshooting

EN

Fault	Cause of fault	Explanation/remedy	By
Noise emission from the inverter.	Particular ambient conditions.	When there are certain ambient conditions, the units may emit audible noises. • Grid interference or grid failure caused by particular loads (motors, machines, etc.) which are either connected to the same point on the grid or located in the vicinity of the inverter. • In cases of volatile weather conditions (frequent switching between sunny and cloudy conditions) or strong solar radiation, a light hum may be audible due to the increased power. • Under particular grid conditions, resonances may form between the unit's input filter and the grid; these may be audible even when the inverter is switched off. These noise emissions do not affect the operation of the inverter. They do not lead to loss of performance, failure, damage or to a shortening of the unit's service life. People with very sensitive hearing (particularly children) are able to hear the high-frequency hum caused by the inverter's operating frequency of approximately 17 kHz.	
		☞ No action	
In spite of high radiation levels, the inverter does not feed the maximum power into the grid.	The device is too hot and the system limits the power.	Because the temperatures inside the unit are too high, the inverter reduces its power to prevent damage to the unit. Note the technical data. Ensure that the convection cooling is not impeded from the exterior. Do not cover the cooling fins.	
		☞ Ensure sufficient cooling of the unit. ☞ Do not cover the cooling fins.	**B, E**

Table 7: Troubleshooting

9.6 "Fault" messages on the display/LED

Many fault signals indicate a fault in the grid. They are not operational faults of the inverter. The triggering levels are defined in standards, e.g. VDE0126-1-1. The inverter shuts down if the values exceed or fall below the approved levels.

9.6.1 Display of status and fault messages

Display	Fault LED (red)		
FS (fault status)	● ⚠	**ON**	• Fault signal relay has switched. • Feed-in was ended due to a fault.
OS (operating status)	○ ⚠	**OFF**	• The fault signal relay releases again. • The inverter feeds back into the grid again after a country-specific time period.

Details regarding the fault or operating status can be found either on the display or in the data that was recorded through the RS485 interface.

Status and fault signals

The following table lists the possible status and fault signals that the inverter shows on the LCD and the LEDs.

BS = operating status, FS = fault status;

B = Action of the operator

E = The indicated work may only be carried out by an authorised electrician.

K = The indicated work may only be carried out by a service employee of KACO new energy GmbH!

EN

Status		Display			Explanation	Action	
OS	1	Waiting for feed-in	○	○	Self-test: The grid parameters and generator voltage are being checked.	-	-
OS	2	Generator voltage too low	○	○	Insufficient generator voltage and power, status before the transition to night shutdown	-	-
OS	8	Self-test	○	○	Checks the shutdown of the power electronics as well as the grid relay before feed-in mode.	-	-
FS	10	Temperature in unit too high	○	●	In case of overheating, the inverter switches off. Possible causes: • Excessively high ambient temperature, • Fan covered, • Inverter defective.	☞ Cool off the area around the inverter. ☞ Uncover the fans. ☞ Notify your authorised electrician.	**B** **B** **E**
OS	11	Measured values	●	○	Power limitation: If the generator power is too high, the inverter limits itself to the maximum power (e.g. around noon if the generator capacity is too large).		
FS	17	Shutting down Powador-protect	○	●	The activated grid and system protection has been tripped.	☞ Wait for reactivation. ☞ Notify your authorised electrician if the fault occurs several times.	**E**
FS	18	Resid. current shutdown	○	●	Residual current was detected. The feed-in was interrupted.	☞ Notify your authorised electrician.	**E**
FS	19	Insulation fault generator	○	●	There is an insulation fault on the PV generator. The feed-in was interrupted.	☞ Notify your authorised electrician if the fault occurs several times.	**E**
FS	30	Fault Transformer fault	○	●	The current and voltage measurements in the inverter are not within acceptable range.	-	-
FS	32	Fault Self-test	○	●	The internal grid separation relay test has failed.	☞ Notify your authorised electrician if the fault occurs several times.	**E**
FS	33	Fault DC feed-in	○	●	The DC feed-in has exceeded the permitted value. This DC feed-in can be caused by grid conditions and may not necessarily indicate a fault.	☞ Notify your authorised electrician if the fault occurs several times.	**E**

Table 8: Operating status and fault messages on the display

EN

Status		Display			Explanation	Action	
FS	34	Internal communication error	○	●	A communication error has occurred in the internal data transmission.	☞ Notify your authorised electrician. ☞ Check the data cable.	**E**
FS	35	Protection shutdown SW	○	●	Protective shutdown of the software (AC overvoltage, AC overcurrent, DC link overvoltage, DC overvoltage, DC overtemperature).	Not a fault Grid-related shutdown, the grid connects again automatically.	
FS	36	Protection shutdown HW	○	●	Protective shutdown of the hardware (AC overvoltage, AC overcurrent, DC link overvoltage).	Not a fault Grid-related shutdown, the grid connects again automatically.	
FS	38	Generator overvoltage error	○	●	The voltage of the DC generator is too high. The PV generator is configured incorrectly.	☞ Notify your authorised electrician.	**E**
FS	41-46	Line failure: Under voltage L1, L2, L3 Over voltage L1, L2, L3	○	●	The voltage of a grid phase is too low; the grid cannot be fed into. The phase experiencing failure is displayed.	☞ Notify your authorised electrician.	**E**
FS	47	Grid failure phase-to-phase voltage	○	●	The measured line-to-line voltage is outside of the tolerance limits.		
FS	48	Line failure Underfrequency	○	●	Grid frequency is too low. This fault may be grid-related.	☞ Notify your authorised electrician.	**E**
FS	49	Line failure Overfrequency	○	●	Grid frequency is too high. This fault may be grid-related.	☞ Notify your authorised electrician.	**E**
FS	50	Line failure average voltage	○	●	The grid voltage measurement according to EN 50160 has exceeded the maximum permitted limit value. This fault may be grid-related.	☞ Notify your authorised electrician.	**E**
FS	57	Waiting for reactivation	○	●	Waiting time of the inverter after a fault.	Inverter does not switch on again until the country-specific time has elapsed.	
FS	58	Overtemperature Control card	○	●	The temperature inside the unit was too high. The inverter switches off to prevent damage to the hardware.	☞ Provide for sufficient ventilation.	**E**
FS	59	Self test error	○	●	A fault occurred during a self-test.	☞ Notify your authorised electrician.	**E**
OS	60	Generator voltage too high	○	●	The inverter does not begin feeding into the grid until the PV voltage falls below a specified value.	-	-
OS	61	External limit (%)	●	○	The external limit *Power control* was activated by the grid operator. The inverter limits its power.		

Table 8: Operating status and fault messages on the display

EN

Status		Display			Explanation	Action	
OS	63	Measured values	●	○	P(f)/frequency-dependent power reduction: Frequency-dependent power reduction will be activated when the BDEW (German Association of Energy and Water Industries) Medium Voltage Directive goes into effect. Power reduction starts at a frequency of 50.2 Hz.		
OS	64	Measured values	●	○	Output current limiting: The AC current is limited once the specified maximum value has been reached.		
FS	67	Fault at power section 1	●	○	There is a fault in the power section.	☞ Notify your authorised electrician.	**E**
FS	70	Fan error	●	○	The fan is malfunctioning.	☞ Replace defective fan.	**E**
FS	73	Standalone grid err.	○	●	Standalone mode was detected.	-	-
OS	74	External idle power requirement	✳	○	The grid operator limits the feed-in power of the inverter via the transmitted reactive power factor.	-	-
OS	79	Insulation measurement	○	○	PV generator's insulation is being measured	-	**-**
FS	80	Insulation meas. not possible	○	●	The insulation measurement cannot be performed because the generator voltage is too volatile.	-	**-**
FS	81, 82, 83	Protection shutdown line volt. L1, L2, L3	○	●	Overvoltage has been detected on a conductor. An internal protective mechanism has disconnected the device to protect it against damage.	☞ In case of repeated occurrence: Notify your authorised electrician.	**E**
FS	84	Protection shutdown undervolt. DC link	○	●	A voltage deviation has been found in the DC link. An internal protective mechanism has disconnected the device to protect it against damage.	☞ In case of repeated occurrence: Notify your authorised electrician.	**E**
FS	85	Protect. shutdown overvolt. DC link	○	●			**E**
FS	86	Protection shutdown: DC link asymmetry	○	●	Overvoltage has been found in the DC link. An internal protective mechanism has disconnected the device to protect it against damage.	☞ In case of repeated occurrence: Notify your authorised electrician.	**E**
FS	87, 88, 89	Protection shutdown overcurrent L1, L2, L3	○	●	A current that has been found on a conductor is too high. An internal protective mechanism has disconnected the device to protect it against damage.	☞ In case of repeated occurrence: Notify your authorised electrician.	**E**
FS	93, 94	Self test error Buffer 1, Buffer 2	○	●	The control board is defective.	☞ Notify authorised electrician / KACO Service	**E/K**

Table 8: Operating status and fault messages on the display

EN

Status		Display			Explanation	Action	
FS	95, 96	Self test error Relay 1, Relay 2	○	●	The power section is defective.	☞ Notify KACO Service	**K**
FS	97	Protection shutdown overcurrent HW	○	●	Too much power has been fed into the grid. Complete disconnection of the device.	☞ Notify authorised electrician / KACO Service	**E/K**
FS	98, 99	Protection shutdown HW gate driver/ HW buffer-free.	○	●	An internal protective mechanism has disconnected the device to protect it against damage. Complete disconnection of the device.	☞ Notify authorised electrician / KACO Service	**E/K**
FS	100	Protect. shutdown HW overheating	○	●	The device has been switched off because the temperatures in the housing were too high.	☞ Check to make sure that the fans are working. ☞ Replace fan if necessary.	**B** **E**
FS	101 to 106	Temperature plausibility error, efficiency, DC link, AFI module, relay, DC/ DC converter	○	●	The unit has shut down because of implausible internal measured values.	☞ Notify KACO Service	**K**
FS	121	Door open	○	●	The door is open. The unit has interrupted the feed-in.	☞ Close door. ☞ Check the contact switch for free movement.	**E**

Table 8: Operating status and fault messages on the display

10 Service

If you need help solving a technical problem with one of our KACO products, please contact our service hotline.

Please have the following information ready so that we can help you quickly and efficiently:

- Device name / serial number
- Date of installation / Start-up report
- Fault message shown on the display / Description of the fault / Did you notice anything unusual? / What has already been done to analyse the fault?
- Module type and string circuit
- Consignment identification / Delivery address / Contact person (with telephone number)
- Information about the accessibility of the installation site.
  Any additional costs arising from unfavourable structural or mounting conditions shall be billed to the customer.

You can find the following items and other information at our web site http://www.kaco-newenergy.de/:

- our current warranty conditions,
- a complaint form,
- the option for registering your device with us. In this manner, you can assist us in providing you with the quickest service possible.
  Note: The maximum length of the warranty is based on the currently applicable national warranty conditions.

Service hotline

	Technical troubleshooting	Technical consultation
inverter	+49 (0) 7132/3818-660	+49 (0) 7132/3818-670
Data logging and accessories	+49 (0) 7132/3818-680	+49 (0) 7132/3818-690
Customer help desk	Monday to Friday 08:00 a.m. to 12:00 p.m. (CET) and 01:00 p.m. to 5:00 p.m.	

EN

11 Shutdown/Disassembly

11.1 Switching off the unit

DANGER

Lethal voltages are still present in the terminals and cables of the inverter even after the inverter has been switched off and disconnected.

Severe injuries or death will occur when touching the cables and terminals in the inverter.

› After shutdown, wait at least five minutes before working on the inverter.

DANGER

Risk of fire if the fuse holder is disconnected in a live state!

The connection terminals and fuse holder can be destroyed by arcing if disconnected or if the fuses are removed.

1. Switch off the grid voltage by turning off the external circuit breakers.
2. Switch off the PV generator using the DC isolator switch.

DANGER! The DC cables are still live!

3. Ensure that there is no voltage present on the grid connection terminals.

11.2 Uninstalling the device

↻ Inverter disconnected and secured against restart.

1. Unlock and open the housing door.
2. Open the connection cover connection area.
3. Remove the interface cable.
4. Release the DC and AC cables from the connection terminals.
5. Open the cable fittings.
6. Pull out the cables.

» The inverter is uninstalled. Proceed with disassembly.

11.3 Disassembling the unit

CAUTION

Risk of injury if the inverter tips over!

Risk of tipping due to high centre of gravity, particularly with the door open.

› Secure the inverter to prevent tipping before disassembly.

› Close and lock the doors of the inverter.

› Only then remove the wall and floor fastenings.

↻ Shut down the inverter.

↻ Uninstall the inverter.

1. Remove the inverter fastening.
2. Securely pack up the inverter if it is to be used later
   or
   have the inverter disposed of professionally.

EN

11.4 Packaging the unit

↻ The inverter is uninstalled.

1. If possible, always pack the inverter in the original packaging. If this is no longer available, an alternative is to use equivalent packaging.
2. You must be able to close the box completely and it must be able to accommodate the weight and size of the inverter.

11.5 Storing the unit

↻ The inverter is packed.

☞ Store the inverter in a dry place, in accordance with the ambient temperature range (see chapter Table 2 on page 11).

12 Disposal

CAUTION

Risk to the environment if disposal is not carried out in the correct manner

For the most part, both the inverter and the corresponding transport packaging are made from recyclable raw materials.

Unit: Do not dispose of faulty inverters or accessories together with household waste. Ensure that the old unit and any accessories are disposed of in a proper manner.

Packaging: Ensure that the transport packaging is disposed of properly.

EN

13 Appendix

13.1 EU Declaration of Conformity

Manufacturer's name and address

KACO new energy GmbH
Carl-Zeiss-Straße 1
74172 Neckarsulm, Germany

Product description

Photovoltaic feed-in inverter

Type designation

Powador 30.0 TL3 - M - INT	**Powador 39.0 TL3 - M - INT**
Powador 30.0 TL3 - XL - INT	**Powador 39.0 TL3 - XL - INT**
Powador 30.0 TL3 - XL - INT - SPD 1+2	**Powador 39.0 TL3 - XL - INT - SPD 1+2**
Powador 30.0 TL3 - XL - F - INT	**Powador 39.0 TL3 - XL - F - INT**
Powador 30.0 TL3 - XL - F - INT - SPD 1+2	**Powador 39.0 TL3 - XL - F - INT - SPD 1+2**
Powador 33.0 TL3 - M - INT	**Powador 40.0 TL3 - M - INT**
Powador 33.0 TL3 - XL - INT	**Powador 40.0 TL3 - XL - INT**
Powador 33.0 TL3 - XL - INT - SPD 1+2	**Powador 40.0 TL3 - XL - INT - SPD 1+2**
Powador 33.0 TL3 - XL - F - INT	**Powador 40.0 TL3 - XL - F - INT**
Powador 33.0 TL3 - XL - F - INT - SPD 1+2	**Powador 40.0 TL3 - XL - F - INT - SPD 1+2**
Powador 36.0 TL3 - M - INT	**Powador 60.0 TL3 - M - INT**
Powador 36.0 TL3 - XL - INT	**Powador 60.0 TL3 - XL - INT**
Powador 36.0 TL3 - XL - INT - SPD 1+2	**Powador 60.0 TL3 - XL - INT - SPD 1+2**
Powador 36.0 TL3 - XL - F - INT	**Powador 60.0 TL3 - XL - F - INT**
Powador 36.0 TL3 - XL - F - INT - SPD 1+2	**Powador 60.0 TL3 - XL - F - INT - SPD 1+2**

This is to confirm that the units listed above comply with the protection requirements set forth in the Directive of the Council of the European Union of 26th February 2014 on the harmonisation of the laws of the member states relating to Electromagnetic Compatibility (2014/30/EU) and the Low Voltage Directive (2014/35/EU).

The units conform to the following standards:

2014/35/EU "Directive relating to electrical equipment designed for use within certain voltage limits"	**Safety of the unit** IEC 62109-1:2010 IEC 62109-2:2011
2014/30/EU “Directive relating to electromagnetic compatibility"	**Interference immunity** EN 61000-6-1:2007 EN 61000-6-2:2005 **Emitted interference** EN 61000-6-3:2007 + A1:2011 **Secondary effects on the grid** EN 61000-3-11:2000 EN 61000-3-12:2011

The types mentioned above are therefore labelled with the CE mark.

Unauthorised modifications to the supplied units and/or any use of the units that is contrary to their intended use render this Declaration of Conformity null and void.
Neckarsulm, 20.04.2016

KACO new energy GmbH

p.p. Matthias Haag
Management team for technology / CTO

EU Declaration of Conformity

Manufacturer's name and address	**KACO new energy GmbH** Carl-Zeiss-Straße 1 74172 Neckarsulm, Germany
Product description	**Photovoltaic feed-in inverter**

Type designation

Powador 48.0 TL3 - M - INT - Park	**Powador 72.0 TL3 - M - INT - Park**
Powador 48.0 TL3 - XL - INT - Park	**Powador 72.0 TL3 - XL - INT - Park**
Powador 48.0 TL3 - XL - INT - SPD 1+2	**Powador 72.0 TL3 - XL - INT - SPD 1+2**
Powador 48.0 TL3 - XL - F - INT - Park	**Powador 72.0 TL3 - XL - F - INT - Park**
Powador 48.0 TL3 - XL - F - SPD 1+2 - Park	**Powador 72.0 TL3 - XL - F - SPD 1+2 - Park**

This is to confirm that the units listed above comply with the protection requirements set forth in the Directive of the Council of the European Union of 26th February 2014 on the harmonisation of the laws of the member states relating to Electromagnetic Compatibility (2014/30/EU) and the Low Voltage Directive (2014/35/EU).
The units conform to the following standards:

2014/35/EU "Directive relating to electrical equipment designed for use within certain voltage limits"	**Safety of the unit** IEC 62109-1:2010 IEC 62109-2:2011
2014/30/EU "Directive relating to electromagnetic compatibility"	**Interference immunity** EN 61000-6-2:2005 **Emitted interference** EN 61000-6-3:2007 + A1:2011* EN 61000-6-4:2007 + A1:2011** * Regarding RFI voltage ** Regarding radiated emission strength **Secondary effects on the grid** EN 61000-3-11:2000 EN 61000-3-12:2011

The types mentioned above are therefore labelled with the CE mark.

Unauthorised modifications to the supplied units and/or any use of the units that is contrary to their intended use render this Declaration of Conformity null and void.

Neckarsulm, 20/04/2016
KACO new energy GmbH

p.p. Matthias Haag
Management team for technology / CTO

31001222-15a-170804

The text and figures reflect the current technical state at the time of printing. Subject to technical changes. No liability for printing errors.

KACO new energy.

Carl-Zeiss-Strasse 1 · 74172 Neckarsulm · Germany · Phone +49 7132 3818-0 · Fax +49 7132 3818-703 · info@kaco-newenergy.de · www.kaco-newenergy.de